Pulptec™ SBT-2400

Static Blade Consistency Transmitter

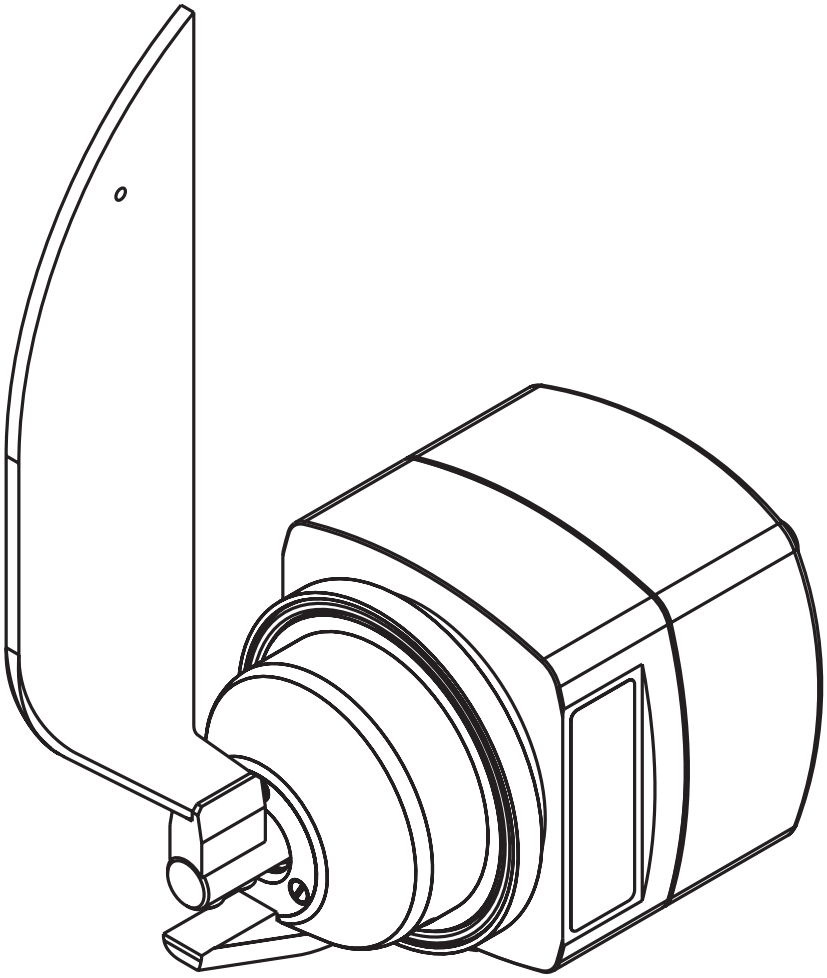

Disclaimer

BTG Pulp & Paper Sensors AB
P.O. Box 602
SE-661 29 Säffle
Sweden
Phone: +46 533 426 00
www.btg.com

Table of contents

1 Product Introduction 1

1.1 System Description 1
1.2 Technical Data 2
1.3 Dimensions and Mounting 4
1.4 Type Sign Explanation 5

2 Safety Instructions 7

2.1 General 7
2.2 Conventions 8
2.3 Safety Regulations 9
2.3.1 Safety Regulations for Installation 9
2.3.2 Safety Regulations for Service 9
2.4 CE-declaration 10

3 Installation Instructions 11

3.1 Unpacking 11
3.2 Assembly of Product Parts 12
3.2.1 Mount the Blade 12
3.2.2 Mount the Deflector 12
3.3 Welding Instructions 13
3.3.1 Weld-on Stud 13
3.3.2 Pipe Deflector 15
3.4 Mounting Instructions 16
3.5 Connection Instruction 17
3.5.1 Electrical Connection 17
3.5.1.1 2-wire Connection 17
3.5.1.2 3- and 4-wire Connection 18
3.5.1.3 Cable Description 19
3.6 Mounting of Optional Accessories 20
3.6.1 Mounting of Fieldbus Interface 20
3.6.2 Mounting of Junction Box 20

4 Operating Instructions 21

4.1 Commissioning 21
4.1.1 Conventions 21
4.1.2 Transmitter Setup. 22
4.1.3 Set Lab Sampling Time 22
4.2 Operations with JCT-1200 23
4.2.1 View Measurement 23
4.2.2 Change Range 23
4.2.3 Calibration 23
4.2.3.1 Single-point Calibration 24
4.2.3.2 Multi-point Calibration 25
4.2.4 Take New Sample Values 26
4.2.4.1 Take New Sample Values from the JCT-1200. 26
4.2.4.2 Take New Sample Values from Sample Switch. 26
4.2.5 Enter Lab Sample Values 26
4.2.6 Calculate New Calibration Constants. 26
4.2.7 Remove Sample Values. 27
4.2.8 Change Offset 27
4.2.9 View Diagnostics 27
4.2.10 Set JCT Display Light Time 27
4.3 Operations with SPC-1000 28
4.3.1 Conventions 28
4.3.2 Code protection 29
4.3.2.1 Changing Your Personal Code 29
4.3.3 Select SBT-2400 Program 29
4.3.4 View Measurement/Read Data 29
4.3.5 Take New Sample Values 30
4.3.6 Enter Lab Sample Values 30
4.3.7 Use Calculated Values in Measurement 30
4.3.8 Use Sample Values in Calculation. 30
4.3.9 Remove Sample Values. 31
4.3.10 Change Transmitter Specifications 31
4.4 HART Communication 32

5 Service Instructions 33

5.1 General 33
5.1.1 Use of Equipment. 33
5.1.2 Basic Conditions 33
5.2 Maintenance Routines 34
5.2.1 Changing O-ring Seals. 34
5.2.1.1 Wetted Part 34
5.2.1.2 Housing 34
5.2.1.3 Measuring Module 35
5.2.1.4 Housing Cover 35
5.2.2 Analog Out Calibration. 36
5.2.2.1 Analog Out Calibration with JCT-1200. 36
5.2.2.2 Analog Out Calibration using SPC-1000 36
5.2.3 Calibration of Transmitter. 37
5.2.3.1 Basic Force Calibration with JCT-1200 37
5.2.3.2 Basic Force Calibration with SPC-1000. 38
5.2.4 Trim Raw Signal using SPC-1000 38
5.3 Repair 39
5.3.1 Transmitter Replacement. 39
5.3.1.1 Remove the Transmitter from Process Pipe 39
5.3.1.2 Change the O-ring Seal 39
5.3.1.3 Mount the Transmitter 39
5.3.2 Blade and Deflector Replacement 40
5.3.2.1 Remove the Blade and Deflector 40
5.3.2.2 Mount the Blade and Deflector 41
5.3.2.3 Mount Transmitter 41
5.3.3 Circuit Board Replacement 42
5.3.3.1 Remove the Circuit Board 42
5.3.3.2 Mount the Circuit Board 43
5.3.4 Measuring Module Replacement 44
5.3.4.1 Remove the Measuring Module 44
5.3.4.2 Change the O-ring Seal 45
5.3.4.3 Mount the Measuring Module 45
5.3.5 Measuring Module O-Ring Seal Replacement. 46
5.3.5.1 Remove the O-Ring Seal 47
5.3.5.2 Mount the New O-Ring Seal 48
5.3.6 Change Transmitter Specifications 49
5.3.7 Change Connector. 49
5.4 Troubleshooting 50

6 Parts List 53

6.1 Spare Parts 53
6.2 Optional Accessories 54

7 Appendix 55

7.1 Process Site Selection 55
7.1.1 Straight Pipe Length Calculation 56
7.1.2 Vertical Pipe Installation. 57
7.1.3 Horizontal Pipe Installation. 58
7.1.4 Multiple Bend Piping Installation 59
7.1.5 Valve and Pump Influences 60
7.2 Flow Guide and Pipe Deflector Installation 61
7.2.1 Pipe Deflector Installation 61
7.2.2 Flow Guide Installation. 62
7.2.3 Reverse Flow Installation. 62
7.3 Dilution 63
7.4 Dimensioning of the Dilution Water Valve 65
7.4.1 Calculation Formula for Dilution Water Flow:. 65
7.4.2 Dimensioning of the Dilution Water Valve 65
7.5 Pressure and Temperature Limits 70
7.6 Menu Overview (only in English) 71
7.6.1 Measurement/Sampling 71
7.6.2 Calibrate. 72
7.6.3 Configure 73
7.6.4 Diagnostics. 73
7.7 Blade Selection Guide 74

1 Product Introduction

1.1 System Description

The SBT-2400 is a static blade transmitter for measurement of the fiber consistency in pulp suspensions. The transmitter uses the shear force principle to measure consistency.

In applications where static blade transmitters are used, the SBT-2400 is an highly competitive alternative both in terms of performance and cost.

The shear force of a pulp suspension is depending on the strength of the fiber network, and increase with fiber consistency. As the pulp suspension flows past the SBT-2400 blade, the shear force of the pulp suspension causes the material in the measuring module to stretch. The other end of the measuring spindle moves when fiber consistency changes and this movement is measured by a differential transformer with an extremely high resolution.

The transmitter basically consists of three parts:

- blade
- measuring module
- electronics module

The measuring module consists of a measuring spindle, and a differential transformer. It is delivered as a complete unit to simplify repair. The electronics module in the transmitter contains both analogue circuitry and a microprocessor performing the smart transmitter functions. To further reduce costs, a factory renovation exchange system is provided for the critical parts.

1.2 Technical Data

General

Manufacturer
BTG, Säffle, Sweden

Quality assurance
In accordance with ISO 9001.

Product safety
Fulfills all relevant CE-directive requirements and all Australian requirements.

Functional Specifications

Measuring Range
Approx. 1.5 - 16% pulp consistency depending on fiber type.
4 different calibration sets.

Analog Output Signal
4 - 20 mA. Current limited to 21 mA.
Superimposed signal according to standard HART® protocol.

Fieldbus
Profibus PA (optional)
Foundation Fieldbus (optional)

Damping
3 - 99 s

Process Specifications

Flow Limits
0.5 - 5 m/s (1.64 - 16.4 ft/sec.)
Depending on blade type, fiber type, and consistency.

Process Temperature Limits
Max. 100 ºC (212 ºF)

Ambient Temperature Limits
Max. 60 ºC (140 ºF)

Support System Specifications

Connection
Delivered with BTG junction box, JCT-1200, as standard.

Power Supply
20 - 35 V DC (2-wire supply)

Performance Specifications

Repeatability
0.01% Cs (at 3% in the range 1.8-4.3%)
Reference pulp: Softwood chemical pulp

Pressure Effect
0.02% Cs*/bar

Process Temperature Effect
0.7%/10ºC of output reading (0.02% Cs*)

Hysteresis
0.007% Cs*

Load Limitation
Max. 1120Ω for supply voltage, 35 V DC.

Load Dependency
< 0.01 mA (100 - 850 Ω) (at 3% Cs in the range 1.8 - 4.3%)
Reference pulp: Softwood chemical pulp

Physical Specifications

Mounting
Weld-on stud for pipeline.

Storage Temperature
Min. -20ºC (-4ºF), Max. 70ºC (158ºF)

Degree of Protection
Equivalent to IP65/NEMA 4
Installation category: III
Pollution degree: 2

Materials
Wetted parts: Stainless steel EN14404 or 254 SMO (option for MC transmitters)
Housing: Aluminum, painted with epoxy/polyurethane
Static O-rings: Fluor rubber or EPDM

Weight
3.9 kg (8.6 lbs)

Connection
Cable, UL/ETL approved, 10 m (33 ft.). Delivered with BTG Junction Box, JCT-1200. Other lengths on request.

Resonance Frequency
Resonance can occur between 450 and 550 Hz

Pressure Rating
PN 25 (360 psi at 68 ºF)

EEC Directives and Standards
According to relevant standards. See section 2.4: *CE-declaration.*

1.3 Dimensions and Mounting

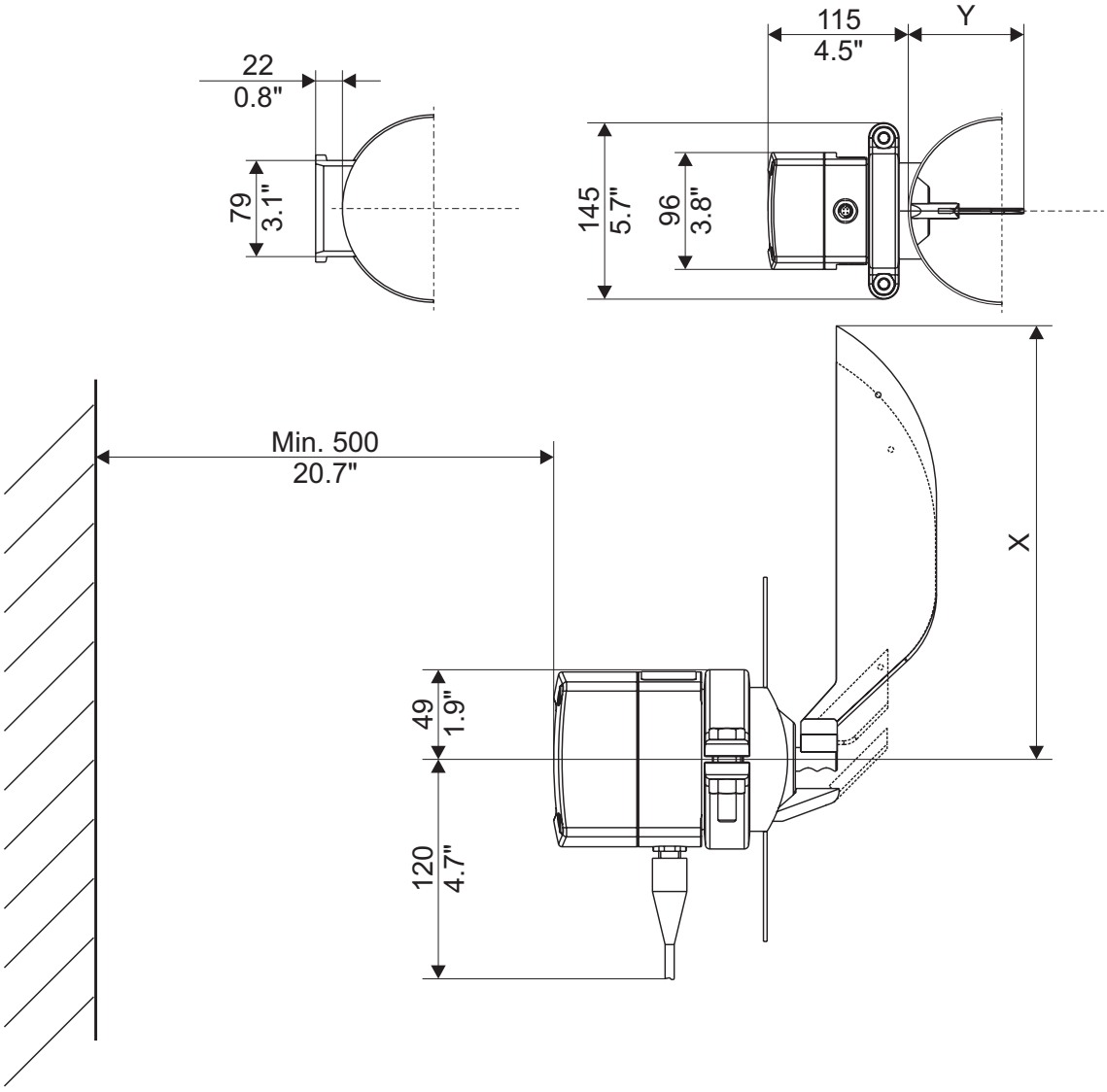

Blade	Dim. X	Dim. Y	Consistency	Min. Pipe Diameter
A	240 mm (9.5”)	93 mm (3.7”)	1.5% - 7%	100 mm (4”)
B	220 mm (8.7”)	93 mm (3.7”)	2% - 8%	100 mm (4”)
C	61 mm (2.5”)	66 mm (2.6”)	4% - 16%	80 mm (3.1”)
D	240 mm (9.5”)	93 mm (3.7”)	1.5% - 8%	100 mm (4”)

1.4 Type Sign Explanation

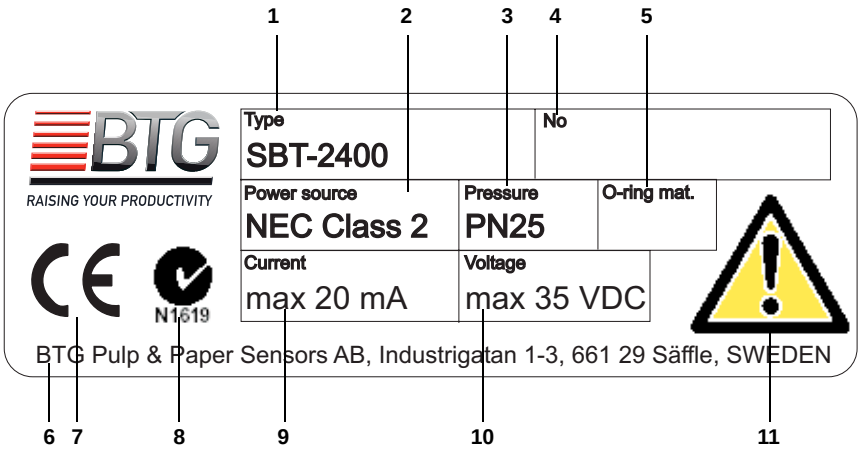

1. **Type specification**
2. **Power source**
3. **Pressure rating**
4. **Manufacturing number**
   BTG internal product identification number.
5. **O-ring material**
6. **Manufacturer**
7. **CE-marking**
   The SBT-2400 is approved according to CE directives.
8. **Australian Tic-marking**
   The SBT-2400 is approved according to Australian Tic directives.
9. **Current**
10. **Voltage**
11. **Warning sign**
    The SBT-2400 is designed for industrial use. Installation, handling and service must only be carried out by trained and authorized personnel and according to relevant standards. Read the manual for detailed information and pay special attention to the warning signs!

2 Safety Instructions

2.1 General

These safety regulations are based on a risk analysis carried out in accordance with the requirements of relevant CE directions in order to comply with European standards for CE marking.

In practice, an operating consistency transmitter is only hazardous while covers are removed during installation and service.

Read these safety regulations before installing the transmitter. Follow the regulations when installing the transmitter, starting up and when carrying out service. Use warning signs for safety information!

Mounting parts, such as the weld-in stud, are dealt with in accordance with the pressure vessel standards of the countries in question.

Always take precautions when handling equipment in pressurized pipes.

All installation, operation, service, and other handling must be carried out by trained and authorized personnel and according to valid standard.

NOTE!
Follow this manual for all installation, operation, and service.

NOTE!
For good personal and functional safety: Use only parts which have been manufactured or approved by BTG.

2.2 Conventions

The following conventions are used in this manual:

- **DANGER!**

  A **DANGER!** admonition is used when there is a hazard with a risk for *injury or possible death* to a person.

- **WARNING!**

  A **WARNING!** admonition is used when there is a risk for *damage* to program, device, machine, sampler and so on.

- **CAUTION!**

  A **CAUTION!** admonition is used when there is a risk for *system failure, service interruption, disturbances* to plant operation, a measuring application and so on.

The admonitions above are hierarchic. A **DANGER!** admonition includes the possibility of both a **WARNING!** and a **CAUTION!** admonition.

2.3 Safety Regulations

2.3.1 Safety Regulations for Installation

All welding must take place in accordance with current standards and regulations.

All handling of electrical units must take place in accordance with current standards and regulations.

2.3.2 Safety Regulations for Service

All handling of electrical units must take place in accordance with current standards and regulations.

2.4 CE-declaration

When using the units in other combinations than tested for, BTG can not guarantee the CE directive conformity.

The units in combination with customer installed external devices may conform with EMC and safety requirements when properly installed and using an adequate CE marked equipment.

The system operator is responsible for the CE directive conformity. The conformity must be verified by inspection.

BTG
RAISING YOUR PRODUCTIVITY

CE-Declaration of Conformity

According to EN 45014

Manufacturer's Name	BTG Pulp & Paper Sensors AB
Manufacturer's Address	P.O. Box 602 S- 661 29 SÄFFLE, Sweden
declares that the product:	
Product Name	Consistency Transmitter
Model Number	SBT-2400
complies with the amendments and requirements of the:	**Machinery Directive** 89/392/EEC **Low Voltage Directive** 73/23/EEC **EMC Directive** 89/336/EEC **PED Directive** 97/23/EEC
and conforms with the following product standards and PED conformity assessment procedure	
Safety	EN 292/1-2
LVD	EN 61010-1
PED	**Pressure accessory for piping** in accordance to: Guideline related to Article 1, 2.1.4 Accepted by WPG on: 1998-11-26 Accepted by Working Group "pressure" on: 1999-01-2 **Must not bear CE-marking**
EMC	EN 61000-6-4:2001 EN 61000-6-2:2001
Quality System	ISO 9001 monitored by Lloyd`s Register Quality Assurance
Säffle **June 2004**	

Tom Gustavsson, MD

3 Installation Instructions

3.1 Unpacking

The following items can be included in an SBT-2400 delivery:

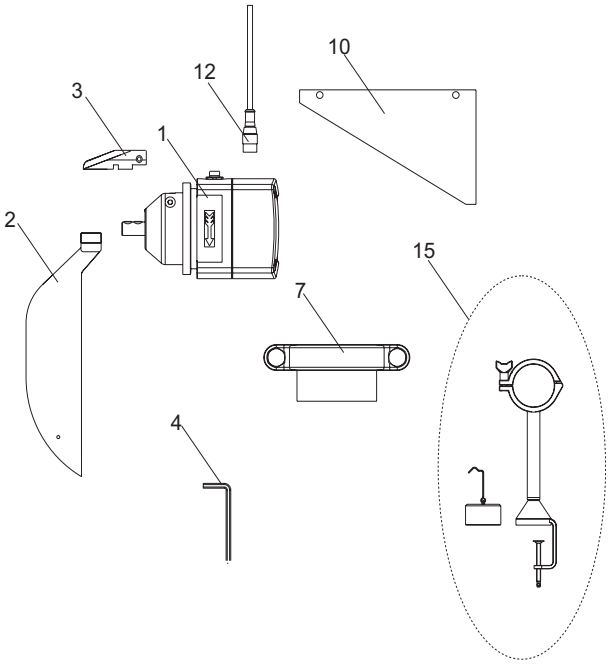

1. 1 x static blade transmitter, SBT-2400
2. 1 x blade
3. 1 x deflector
4. 1 x 4 mm Allen key
5. 1 x set of bolts for the blade (not shown in figure)
6. 1 x cd with documentation (not shown in figure)
7. 1 x weld-in stud, complete with coupling and blind flange
8. 1 x welding profile (not shown in figure)
9. 1 x welding instruction (not shown in figure)
10. 1 x flow guide/pipe deflector
11. 1 x junction box, JCT-1200 (optional, not shown in figure)
12. 1 x cable with connector in one end (optional)
13. 1 x printed manual (optional, not shown in figure)
14. 1 x welding jig (optional, not shown in figure)
15. 1 x calibration kit (optional)
16. 1 x fieldbus interface, FCI-family (optional, not shown in figure)

3.2 Assembly of Product Parts

3.2.1 Mount the Blade

See section 5.3.2.2 on page 41.

3.2.2 Mount the Deflector

See section 5.3.2.2 on page 41.

3.3 Welding Instructions

3.3.1 Weld-on Stud

The transmitter is mounted in a stud that is welded to the process piping. Before the weld-on stud is welded on the pipe, the stud must be profiled in order to fit the pipe dimension. This is necessary to avoid intrusion into the pipe.

NOTE!
The distance from the stud flange to the inner diameter of the pipe must always be kept to 22 mm. The measuring result will not be reliable if the transmitter has more than ±0.5º angle deviation.

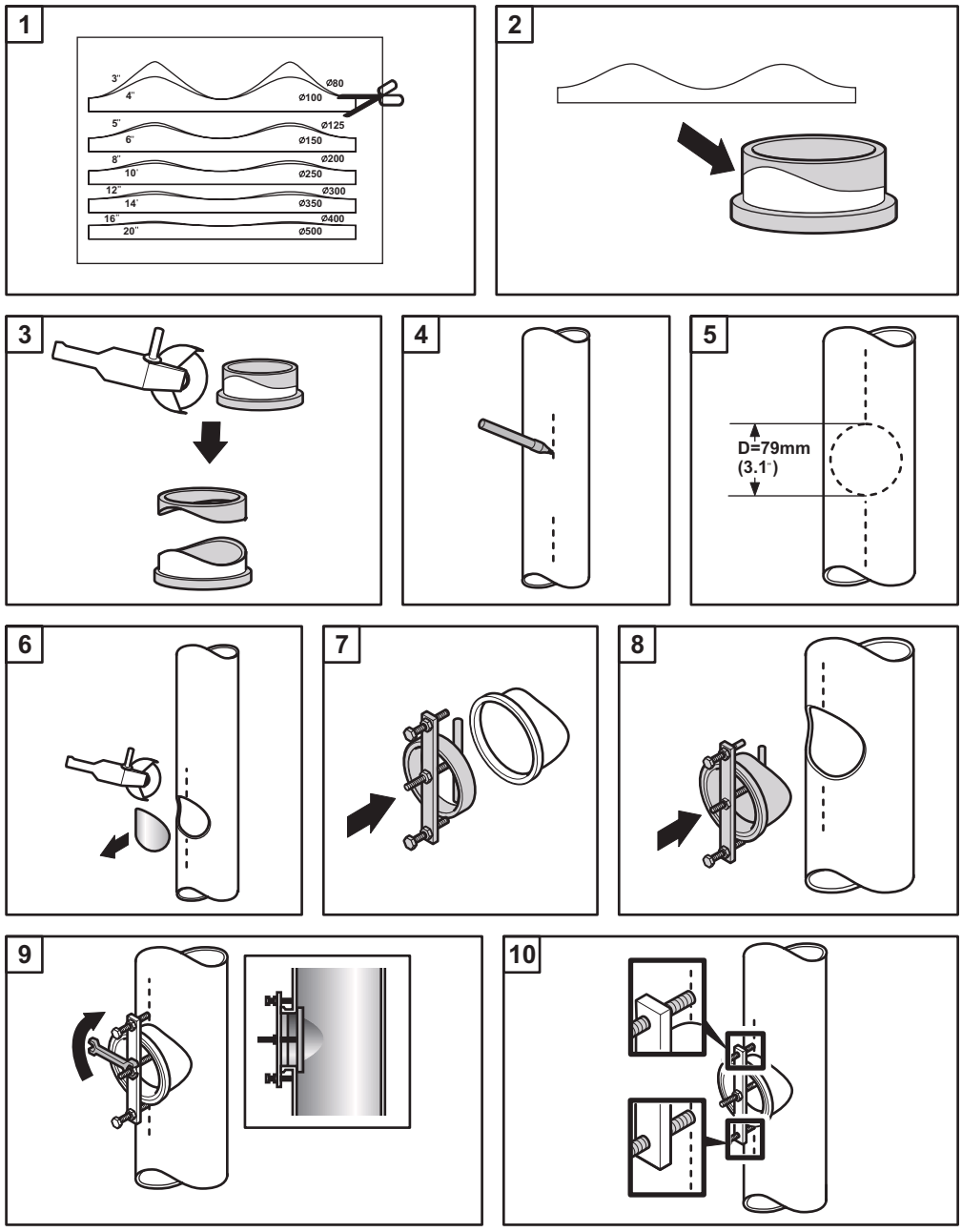

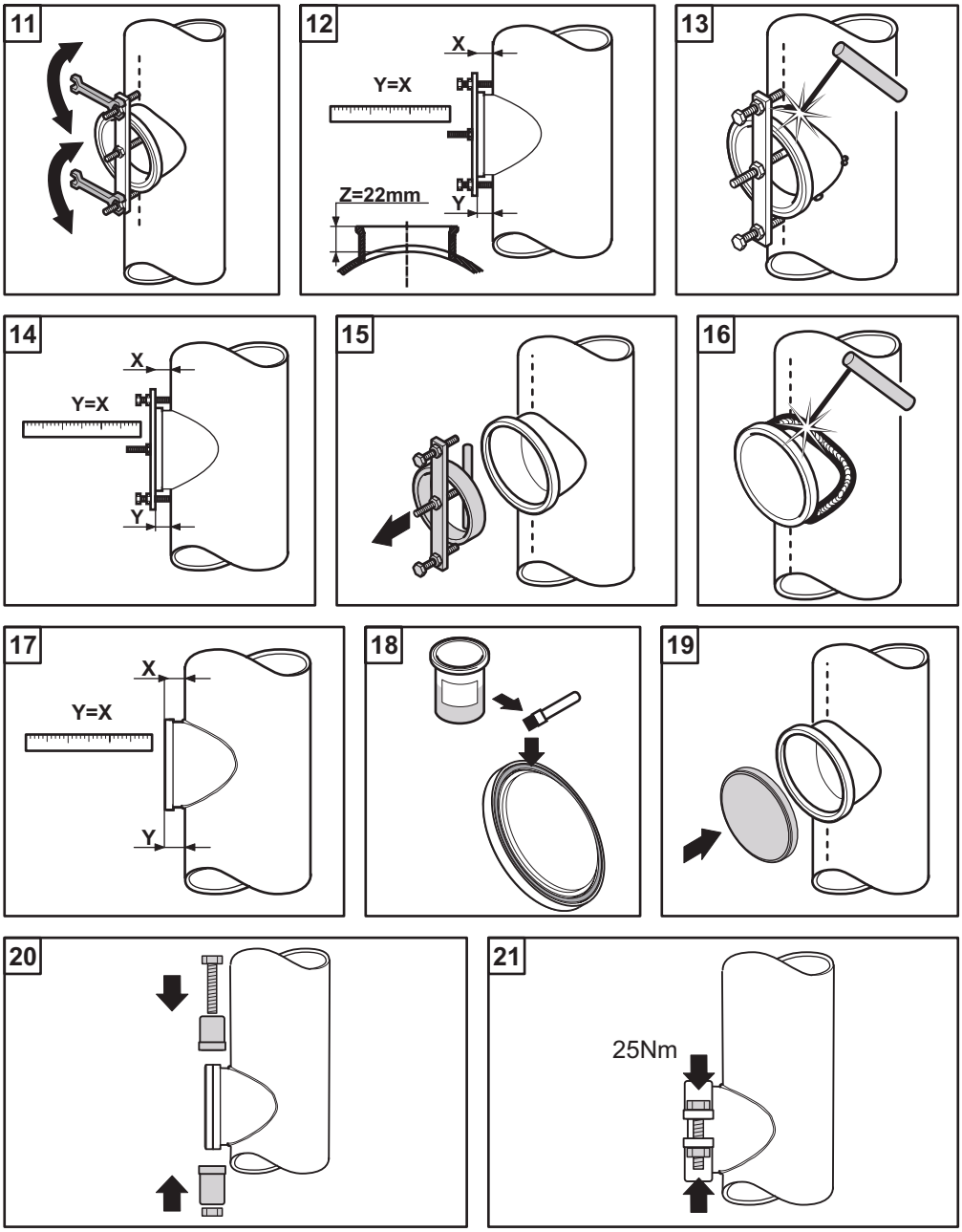

3.3.2 Pipe Deflector

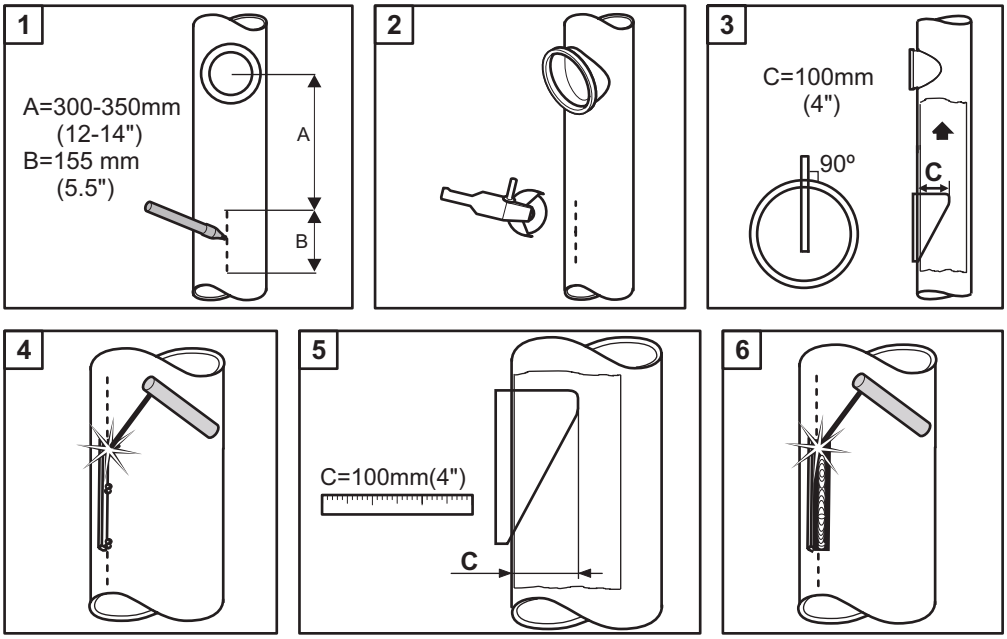

NOTE!
Insert a piece of welding wire into each of the two holes in the deflector before inserting it into the pipe. This will hold the deflector at the correct height during welding.

3.4 Mounting Instructions

Consumables required:
Silicon grease

NOTE!
Before transmitter setup is done, a shear force trim must be performed.

NOTE!
If the O-ring tends to fall out, use silicon grease to keep the O-ring in the groove.

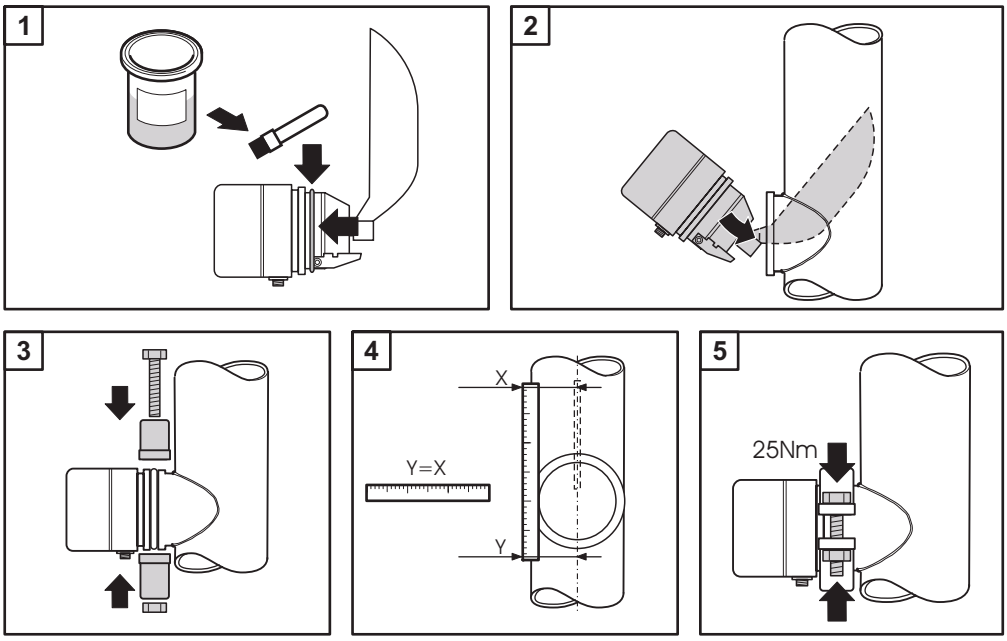

NOTE!
Align the transmitter with the process piping center line.
IMPORTANT! Place a ruler on the flat aligning area to position the transmitter.
The maximum aligning deviation allowed is ±0.5°

3.5 Connection Instruction

3.5.1 Electrical Connection

For information on how to connect the transmitter to a BTG junction box, JCT-1200, see the *Connection Instructions* in the JCT-1200 user manual.

3.5.1.1 2-wire Connection

NOTE!
Default configuration from BTG is a 2-wire setup.

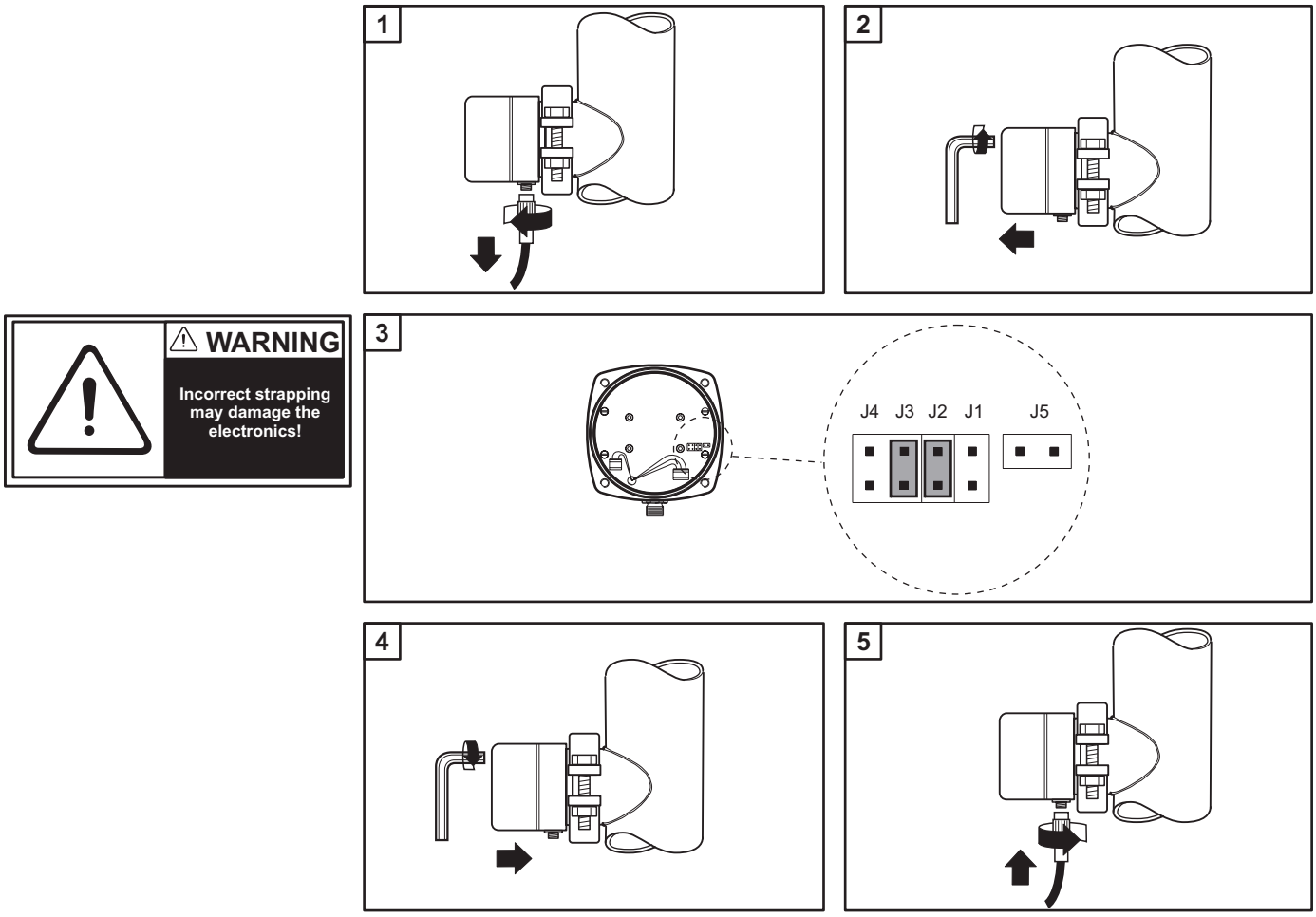

3.5.1.2 3- and 4-wire Connection

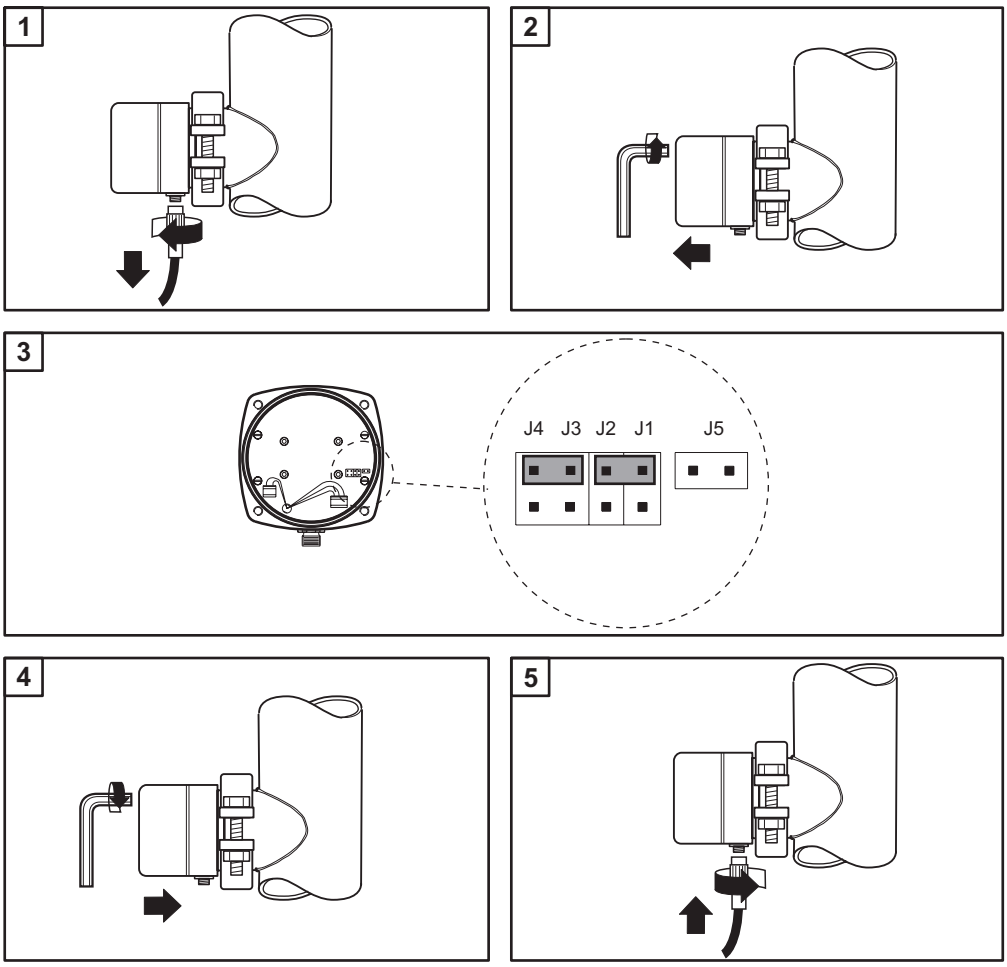

WARNING

Incorrect strapping may damage the electronics!

3.6 Mounting of Optional Accessories

3.6.1 Mounting of Fieldbus Interface

See the Installation Instruction chapter in the user manual for appropriate FCI-family product.

3.6.2 Mounting of Junction Box JCT-1200

See the Installation Instruction chapter in the JCT-1200 user manual.

4 Operating Instructions

4.1 Commissioning

4.1.1 Conventions

To navigate in the SBT-2400 software, three function keys (**F1**, **F2**, and **F3**) are used, along with two scroll keys (**Up** and **Down**) on the JCT-1200. The function keys have different functions depending on where in the structure of the software the user is. In the following instructions the displayed item is shown with the function key shown in a parenthesis.
Example: **Enter (F2)**

The scroll keys are just shown using bold text only.
Example: Use the **Up/Down** keys to select appropriate parameter.

NOTE!
For more information on the menu system, see section 7.6: *Menu Overview (only in English)*.

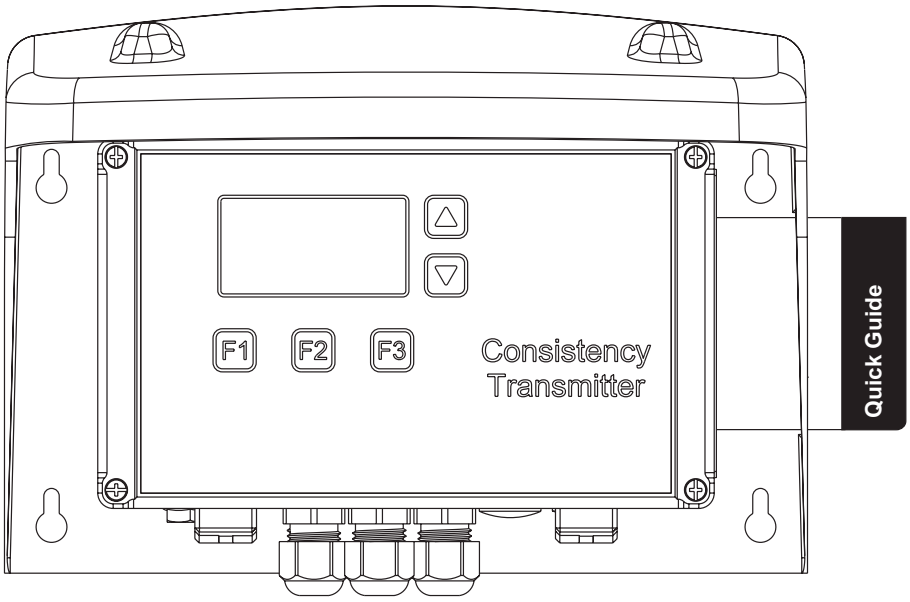

The **Up/Down** keys are also used to change parameter values. For instance, in the basic calibration window, mark the **Offset** option by using the **Up/Down** keys. Then press **Edit (F3)**. The cursor will start flashing. By using the **=> (F2)** key and the **Up/Down** keys, the value can be changed. To save the new value, press **OK (F1)**.

4.1.2 Transmitter Setup

The purpose of the setup is to set the mounted transmitter into operation with a basic calibration. This concerns the mounting position, blade type, tag number, pulp type calibration constants and the span of the output signal.

NOTE!
Before transmitter setup is done, a shear force trim must be performed. See section 5.2.3: *Calibration of Transmitter*.

1. Power up the JCT-1200.
2. Press **Menu (F1)**, step down through the menu tree to the **Shear force trim** window, note the **Raw signal** value.
3. Select the **Mounted+air** option and press **Edit (F3)**.
4. Enter the **Raw signal** value and press **OK (F1)**.
5. Press **Menu (F1)**, step down through the menu tree to the **General settings** window, select the **Blade type** option and press **Edit (F3)**.
6. Enter the correct blade. Press **OK (F1)**.
7. Select **Tag**, press **Edit (F3)**, enter the correct tag. Press **OK (F1)**.
8. Press the **Menu (F1)** key twice to step up through the menu tree.
   The main menu window opens.
9. Go to the **Basic calibration** window for **Range 1**, select the **K1** option and press **Edit (F3)**.
10. Enter the appropriate value from the calibration table. See section 7.7: *Blade Selection Guide*.
    Press **OK (F1)**.
11. Select the **K2** option and press **Edit (F3)**. Enter appropriate value from the same calibration table as in step 9. Press **OK (F1)**.
12. Select the **4mA** option and press **Edit (F3)**. Enter correct percentage for 4mA. Press **OK (F1)**.
13. Select the **20mA** option and press **Enter (F2)**. Enter correct percentage for 20mA. Press **OK (F1)**.
14. Transmitter setup is completed.

IMPORTANT!
Note all entered values and save as backup.

4.1.3 Set Lab Sampling Time

The **LabSamplTime** value should correspond to the actual time it takes to collect the lab sample from the process pipe.

1. Press **Menu (F1)**, step down through the menu tree to the **General settings** window, select the **LabSamplTime** option and press **Edit (F3)**.
2. Enter correct time. Press **OK (F1)**.

4.2 Operations with JCT-1200

4.2.1 View Measurement

Select one of the three windows by pressing the **Next (F2)** key.

The first window shows **Cons** in a large font.
The second window shows **Raw signal** in a large font.
The third window shows all values in normal font.

4.2.2 Change Range

In SBT-2400 four different ranges are available. For more information, see the JCT-1200 manual. To change between the ranges, use binary input on the Range Select Inputs in the JCT-1200.

NOTE!
Only for DCS!

4.2.3 Calibration

It is easy to calibrate the SBT-2400 to the actual pulp. There is a number of calibration sets for a lot of different pulps which fits in most cases. See section 7.7: *Blade Selection Guide* for calibration constants for different pulps and different blades. If the appropriate constants are not in the guide, contact BTG service personnel for information or proceed with a multi-point calibration to calculate specific constants for your pulp.

When using the constants from the guide, a single point calibration with an offset adjustment at the target consistency will put the transmitter in a good calibrated status. A multipoint calibration with up to nine lab samples will of course make the transmitter perform even better.

- Single-point calibration

  A single point calibration is used with already made calibration constants to adjust for the specific pulp. Even though the pulp is listed in the Blade selection guide, every installation will differ slightly. The calibration will set an offset adjustment only.

  The operation needed is to take one sample according to section 4.2.4: *Take New Sample Values* and note the consistency value from the sampling results page on the specific sample. When the laboratory test is finished the deviation can be calculated and entered as on offset in the basic calibration page.

- Multi-point calibration

  In some occasions there is a need for a more precise calibration. The pulp could be very different from the ones listed in section 7.7: *Blade Selection Guide* or a mix of different pulp grades. In these cases a multiple point calibration is preferred to have the SBT-2400 work as expected.

4.2.3.1 Single-point Calibration

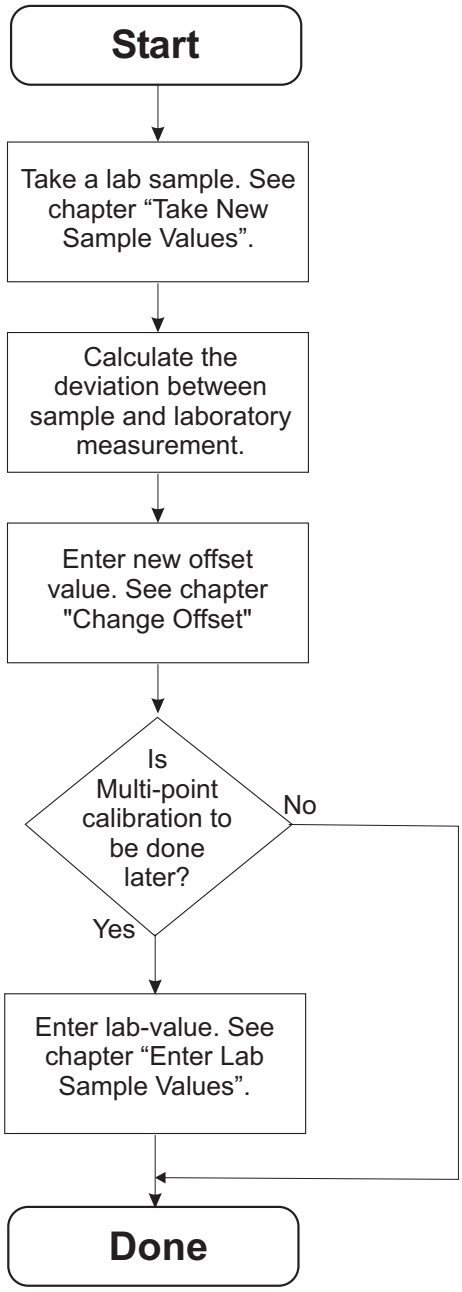

4.2.3.2 Multi-point Calibration

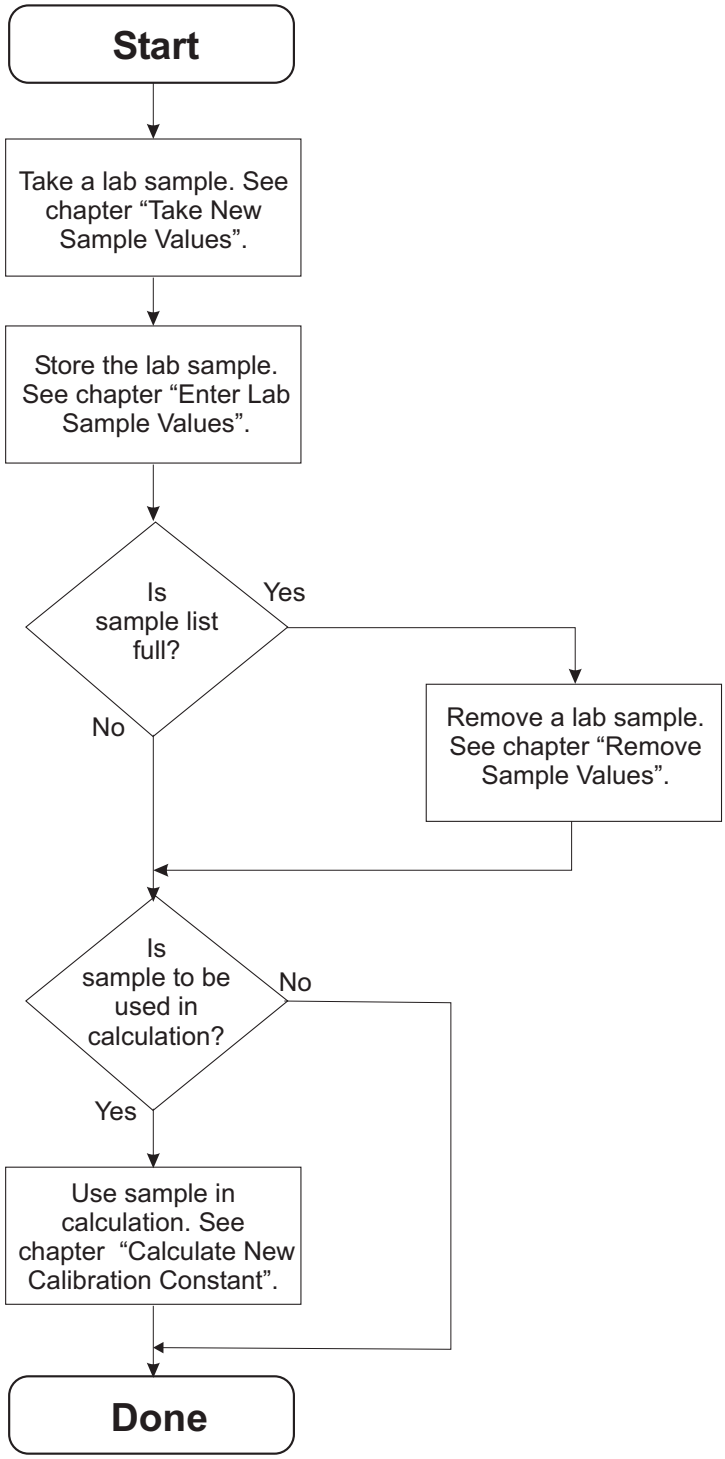

4.2.4 Take New Sample Values

4.2.4.1 Take New Sample Values from the JCT-1200

1. Press the **Sample (F3)** key. The sample window opens.
2. Press **Start (F1)**. Wait for the confirmation window.
3. If the sample was successful, press **Save (F2)**.

4.2.4.2 Take New Sample Values from Sample Switch

If an external sample switch is connected, do as follows:

1. Activate the sample switch.
   The JCT-1200 display lights up. Sampling is started.
2. If there is too much signal variation during sampling, make another sample. Activate the sample switch to start a new sample.
   If the sample was OK, press **Save (F1)** on the JCT-1200.

NOTE!
Write down the sample number.

4.2.5 Enter Lab Sample Values

1. Press the **Menu (F1)** key, step down through the menu tree to the **Lab calibration** window.
2. Select the appropriate **Sample** number, use the **-> (F2)** key to mark the **Lab cons** value. Press **Edit (F3)**.
3. Enter the lab value. Press **OK (F1)**.

4.2.6 Calculate New Calibration Constants

1. Press the **Menu (F1)** key, step down through the menu tree to the **Lab calibration** window.
2. Select the appropriate **Sample** number, use the **-> (F2)** key to mark the **On/Off** column and press the **On/Off (F3)** key.
   Only if both **Shear force** and **Lab cons** have values larger than zero, it is possible to place the cursor in the **On/Off** column. A star indicates that the sample is used. Repeat the same procedure for each sample that will be used.

   NOTE!
   The maximum number of samples is nine. To select samples with higher number than displayed, use the Up/Down keys to scroll the text in the window.

3. Press the **Result (F1)** key.
   The lab calibration result window opens.
4. If you want to use the new value, press **Save (F2)**.
   If you want to use the old value, press **Cancel (F3)** or press **Back (F1)** and turn the samples off again.

4.2.7 Remove Sample Values

1. Press the **Menu (F1)** key, step down through the menu tree to the **Lab calibration** window.
2. Select a sample and press **Edit (F3)**.
   If sample is active, select the ***** with the **-> (F2)** key and deactivate by pressing **On/Off (F3)**.
3. Remove the **Sample** value and press **Delete (F3)**.
4. Press **OK (F1)**.

4.2.8 Change Offset

1. Press the **Menu (F1)** key, step down through the menu tree to the **Basic calibration** window.
2. Select **Offset** and press **Edit (F3)**.
3. Enter the offset value. Press **OK (F1)**.

4.2.9 View Diagnostics

1. Press the **Menu (F1)** key, step down through the menu tree to the **Diagnostics** window.
2. View the transmitter's internal temperature, the maximum temperature exposed to the transmitter, the software version, running hours and the number of transmitter start-ups.

4.2.10 Set JCT Display Light Time

1. Press the **Menu (F1)** key, step down through the menu tree to the **General settings** window.
2. Select the **LcdBackLight** option. Press **Edit (F3)**.
3. Enter the number of seconds the JCT display shall stay lit after the last button is pressed. Press **OK (F1)**.

NOTE!
If the **LcdBackLight** option is set to anything but zero, the light will be activated when a button is pressed. The first time a button is pressed, the display is lit; the second time a button is pressed, the function of the button is activated

NOTE!
If a JCT with power supply is used, the display will be lit at all times.

4.3 Operations with SPC-1000

Prerequisites:
That SPC-1000 is connected to SBT-2400 through JCT-1200, and that the software communication is established.

The JCT-1200 is not equipped with power supply as standard, so verify that SPC-1000 batteries are charged before connecting to the JCT-1200.

NOTE!
The backlight function in SPC-1000 is only supported in 4-wire installations.

4.3.1 Conventions

SPC-1000 uses a touch display for software navigation. The display is divided into a grid, and different options are displayed depending on where in the software you are.

In the following instructions, the displayed options are shown with the button name in bold.
Example: **Calibr.**

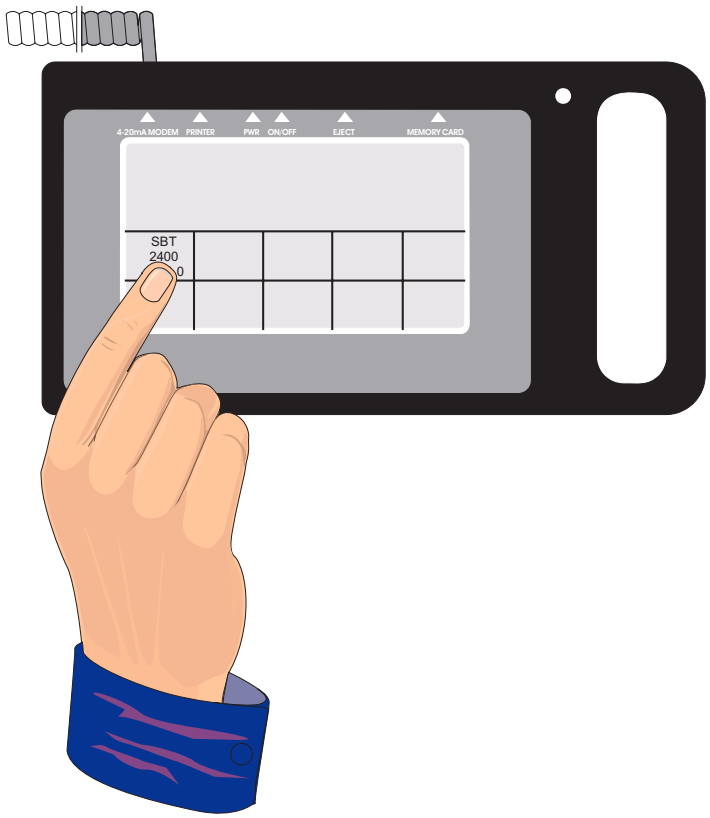

4.3.2 Code protection

A security code can be entered to prevent unauthorized adjustment of the transmitter settings. A personal code or the general BTG code, 42 600, can be used.

4.3.2.1 Changing Your Personal Code

1. Press the **Send data** option.
   The send data window opens.
2. Press **Turn code ON/OFF**.
3. Press **Change code**. Load old code will be displayed. Enter your old personal code (or the general BTG code). **Load new code** will then be displayed. Enter your new code (max 5 digits). Press **Enter**.

The code protection can also be deactivated/activated

Press **Code ON/OFF** so that it displays desired setting.
Enter your personal code.

4.3.3 Select SBT-2400 Program

1. Power up the SPC-1000.
   The start-up screen opens.
2. Press the **SBT 2400** option.
   The main window opens.

4.3.4 View Measurement/Read Data

1. Press the **Read data** option.
   The read data window opens.
2. Press the **Yes** option.
   The main window opens with updated information.
3. View measurement in main window.

4.3.5 Take New Sample Values

1. Press the **Calibr.** option.
   A new window opens.
2. Press the **Take sample menu** option.
   A new window opens.
3. Press the **Edit sample** option to select a memory slot to store the sample.
4. Press the **Avrg. of xx s** option to select the sampling time.
   A new window opens.
   Select the time in seconds and press the **Enter/Menu** option.
5. Press the **Take sample** option.
   A new window opens.
6. Wait for sampling to finish.
7. Press the **Accept** option to accept the sample.

NOTE!
The sample can not be used in the calculation until the lab sample value is entered.

4.3.6 Enter Lab Sample Values

1. Press the **Calibration** option.
   A new window opens.
2. Press the **Load lab cons** option.
   A new window opens.
3. Press the **Edit sample** option to select a memory slot to store the sample.
4. Press the **Load lab cons** option to load the lab consistency.
   A new window opens.
   Select the value in percent and press the **Enter/Menu** option.

4.3.7 Use Calculated Values in Measurement

1. Press the **Calibration** option.
   A new window opens.
2. Press the **Load lab cons** option.
   A new window opens.
3. Select appropriate sample and press the **ON/OFF** option.

4.3.8 Use Sample Values in Calculation

1. Press the **Calibration** option.
   A new window opens.
2. Press the **Calc. new calibr.** option.

4.3.9 Remove Sample Values

1. Press the **Calibration** option.
   A new window opens.
2. Press the **Take sample menu** option.
   A new window opens.
3. Press the **New calibration** option.
   A new window opens.
4. Press the **Yes** option.

NOTE!
The entire table will be erased.

4.3.10 Change Transmitter Specifications

1. Press the **Configure** option.
   A new window opens.
2. Press appropriate parameter and edit the value.
3. Press the **Send page** option.

4.4 HART Communication

This transmitter uses the *HART universal command specification, revision 5.0*. The following universal commands are available:

HART Universal Command		Use in SBT-2400	Comments
0	Read unique identifier	Reads device name, HW and SW revisions, Tag name and so on	-
1	Read primary value	Reads consistency	-
2	Read primary value current and percent of range	Reads analog out in percent of range	-
3	Read dynamic variables and primary values current	Available, not used	String empty
4	Reserved	Not available	-
5	Reserved	Not available	-
6	Write polling address	Write polling addresses	-
11	Read unique identifier associated with tag	Same as command 0 but using tag as identifier.	-
12	Read message	Read message	String empty
13	Read tag, descriptor, date	Read tag, descriptor, date	-
14	Read primary variable sensor information	Available, not used	String empty
15	Read primary value output information		-
16	Read final assembly number	Available, not used	String empty
17	Write message	Available, not used. See also command 12	String empty
18	Write tag, descriptor, date	See also command 13	-
19	Write finally assembly number	Available, not used. See also command 16	String empty

5 Service Instructions

5.1 General

If the transmitter is correctly installed, service can be kept to a minimum. The transmitter is designed and built to be robust enough to withstand high mechanical impacts on the blade. However, special precautions may be needed in the event of abnormal situations occurring.

Examples of abnormal situations include:

- **Excessive vibration in the pipe system**

  Vibration can ruin the measurement and cause abnormal wear on the transmitter. If the vibration level is too high, locate the reason and take appropriate steps to remove the vibration.

  The problem can be caused by cavitation in a pump or weak process-pipe supports.

  If the problem cannot be found or corrected at the source, install flexible rubber bellows in the process pipe.

- **Pulp contains large foreign objects or high-consistency chunks**

  If the pulp can contain large foreign objects, or high-consistency chunks, flow deflectors must be installed. Otherwise the blade and measuring module risk damage.

5.1.1 Use of Equipment

- The transmitter is not designed to be used as a ladder or a footstep! Do not use it as such!
- The signal cable must be correctly located and supported to avoid stress to the contact as well as to the cable.
- The contact must be correctly tightened to avoid leakage.
- To avoid signal interference, the signal cable must not be close to the high voltage power cables.
- Do not clean the transmitter using a high-pressure jet cleaner! Water may penetrate into the transmitter and damage it.
  Protect the transmitter from frequent flooding from sources such as a chest.
- Power must be within correct voltage range (20-35VDC) when connecting the transmitter.
  Over-voltage will ruin the electronics!

5.1.2 Basic Conditions

Ensure that suitable tools and measuring instruments are available. Certain actions require special tools from BTG. Required tools, spare parts, and consumables are listed in each service action section.

5.2 Maintenance Routines

5.2.1 Changing O-ring Seals

5.2.1.1 Wetted Part

Spare parts required:
O-ring seal

Consumable required:
(Silicon grease)

1. Remove the old O-ring seal from the SBT-2400.
2. Mount the new O-ring seal. Use silicon grease to keep it in place during installation.

5.2.1.2 Housing

Spare parts required:
O-ring seal

Tools required:
Snap ring pliers 2.5 mm allen key/hexagon spanner 4 mm allen key/hexagon spanner (Small pliers) (Wise)

Consumable required:
(Silicone grease)

1. Remove the blade. See section 5.3.2.1: *Remove the Blade and Deflector*.
2. Remove the housing cover.
3. Remove the circuit board. See section 5.3.3.1: *Remove the Circuit Board*.

4. Remove the 3 bolts (1) at the bottom of the transmitter housing.

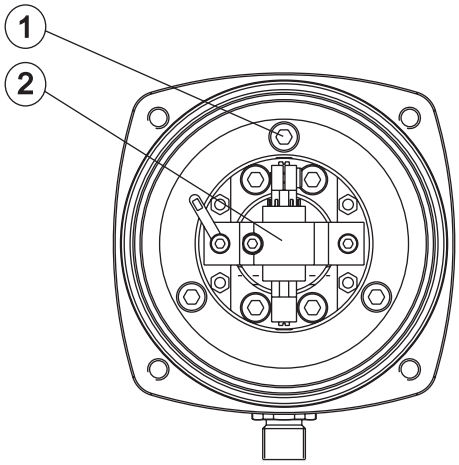

5. Carefully extract the measuring module (2).
6. Remove the old O-ring seal from the housing.
7. Insert the new O-ring seal. If needed, use silicon grease to hold the O-ring seal in place during assembly.
8. Assemble in reverse order.

5.2.1.3 Measuring Module

See section 5.3.5: *Measuring Module O-Ring Seal Replacement*.

5.2.1.4 Housing Cover

Spare parts required:
O-ring seal

Tools required:
Snap ring pliers 2.5 mm allen key/hexagon spanner 4 mm allen key/hexagon spanner (Small pliers) (Wise)

Consumable required:
(Silicone grease)

1. Remove the four screws and remove the cover.
2. Remove the old O-ring seal from the cover.
3. Mount the new O-ring seal. If needed, use silicon grease to keep it in place during assembly.
4. Assemble in revers order.

5.2.2 Analog Out Calibration

5.2.2.1 Analog Out Calibration with JCT-1200

Tools required:
Digital Multi-meter (DMM)

1. Do a serial connection with a DMM to the output signal from the SBT-2400.
2. Press the **Menu (F1)** key, step down through the menu tree to the **Analog output trim** window.
3. Select the **Test output** option, press **Edit (F3)**. Enter **4** mA and press **OK (F1)**.
4. Press **Test (F2)**.
   Note the value displayed on the DMM.
   The value is displayed for 30 seconds after **Test (F2)** is pressed.
5. Select the **4 mA trim** option, press **Edit (F3)**. Enter the necessary trim adjustment to trim the display value to exactly 4 mA. Press **OK (F1)**.
6. Press **Test (F2)** again.
   Note the value displayed on the DMM.
   Repeat step 4 and step 5 until the displayed value is exactly 4 mA.
7. Select the **Test output** option, press **Edit (F3)**. Enter **20** mA and press **OK (F1)**.
8. Press **Test (F2)**.
   Note the value displayed on the DMM.
9. Select the **20 mA trim** option, press **Edit (F3)**. Enter the necessary trim adjustment to trim the display value to exactly 20 mA. Press **OK (F1)**.
10. Press **Test (F2)** again.
    Note the value displayed on the DMM.
    Repeat step 8 and step 9 until the displayed value is exactly 20 mA.

5.2.2.2 Analog Out Calibration using SPC-1000

Tools required:
SPC-1000

1. Press the **Misc.** option.
   A new window opens.
2. Press the **Factory setting** option.
   A new window opens.
3. Enter the following code: **1632**
   Press **Enter**.
   A new window opens.
4. Press the **4 mA** option.
   A new window opens.
5. To adjust the 4mA signal, press the **4 up** or **4 down** options. Press **Enter**.
6. Press the **20 mA** option.
   A new window opens.
7. To adjust the 20mA signal, press the **20 up** or **20 down** options. Press **Enter**.

5.2.3 Calibration of Transmitter

The factory preset for the transmitter is equal to a shear force of 0-15 N. This represents a consistency span of approximately 0 – 6% long-fiber chemical pulp and approximately 0 - 7% short-fiber chemical pulp for blade A.

A basic calibration is required when:

- The blade is changed to another type (different weight).
- The basic setting must be verified.
- The signal does not correlate to the laboratory consistency samples.
- The blade has been exposed to a very high mechanical force.

5.2.3.1 Basic Force Calibration with JCT-1200

Tools required:
Calibration stand Calibration weight

Prerequisites: That the transmitter is mounted in the calibration wise with the blade pointing sideways (horizontal) and that the JCT-1200 is connected and working.

1. Press the **Menu (F1)** key, step down through the menu tree to the **Shear force trim** window.
2. Note the value for **Raw**.
3. Select the **Blade** value and press the **Edit (F3)** key.
4. Enter the noted value and press **OK (F1)**.
5. Turn the transmitter with blade pointing downwards.

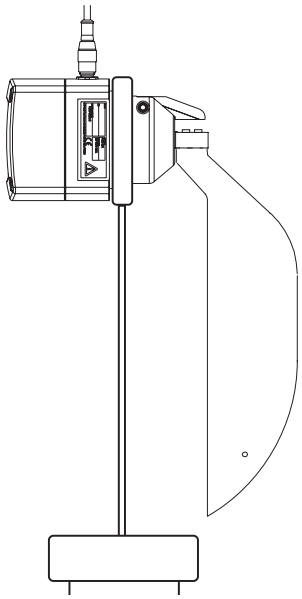

6. Place the calibration weight in the hole in the blade.
7. Wait until **Raw** signal have stabilized. Wait approx. 30 minutes.
8. Note the value for **Raw**.
9. Select the **Blade+weight** option and press the **Edit (F3)** key.

10. Enter the noted value and press **OK (F1)**.
11. Remove the weight and turn the transmitter in the position that it will be mounted.
12. Note the value for **Raw**.
13. Select the **Mounted+air** option and press the **Edit (F3)** key.
14. Enter the noted value and press **OK (F1)**.
15. The transmitter is now ready to be installed.

NOTE!
The Raw sig Trim is a factory set value and should normally not be changed unless measuring module have been changed.

5.2.3.2 Basic Force Calibration with SPC-1000

Prerequisites: That the transmitter is mounted in a jaw wise with the blade pointing sideways, and that the SPC-1000 is connected and working.

1. Press the **Configure** option.
   A new window opens.
2. Press the **Shear force trim.** option.
   A new window opens.
3. Wait until the **Raw signal** is stable, then press the **Set min** option.
4. Turn transmitter with the blade pointing downwards.
5. Hang the calibration weight on the blade.
6. Wait until the **Raw signal** is stable (approx. 30 minutes), then press the **Set max** option.
7. Press the **Send page** option.

5.2.4 Trim Raw Signal using SPC-1000

1. Press the **Misc.** option.
   A new window opens.
2. Press the **Factory setting** option.
   A new window opens.
3. Enter the following code: **1632**
   Press **Enter**. A new window opens.
4. To adjust the Raw signal, press the **Trim up** or **Trim down** options. Press **Enter**.

5.3 Repair

5.3.1 Transmitter Replacement

- Before any service is carried out, the transmitter must be carefully cleaned from pulp and other impurities.
- If the transmitter is taken to a workshop for detailed service, ensure that the workbench is clean. Particles can penetrate the differential transformer and degrade the performance.

5.3.1.1 Remove the Transmitter from Process Pipe

Tools required:
Spanner

1. Loosen the cable connection and remove the cable.
2. Loosen the clamp.
3. Remove the transmitter from the pipe and clean it.

5.3.1.2 Change the O-ring Seal

See section 5.2.1.1: *Wetted Part*.

5.3.1.3 Mount the Transmitter

See section 3: *Installation Instructions*.

5.3.2 Blade and Deflector Replacement

The blade is removed when:

- there is a change of pulp type/measuring range
- the blade has been damaged
- service on the measuring part is to be performed

5.3.2.1 Remove the Blade and Deflector

Tools required:
4mm Allen key/hexagon spanner

1. Undo the two screws (1) and remove the deflector (2).

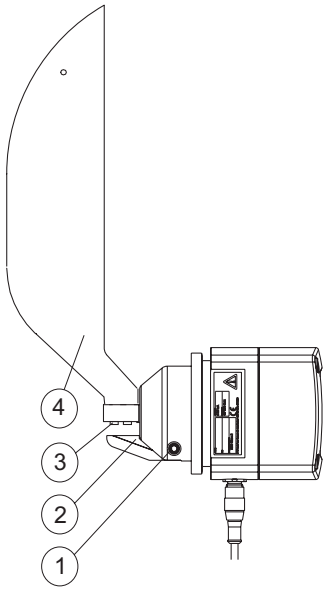

2. Fix the blade (4) in a jaw wise at the same as you hold the transmitter with your other hand to avoid excessive force on the mechanism.

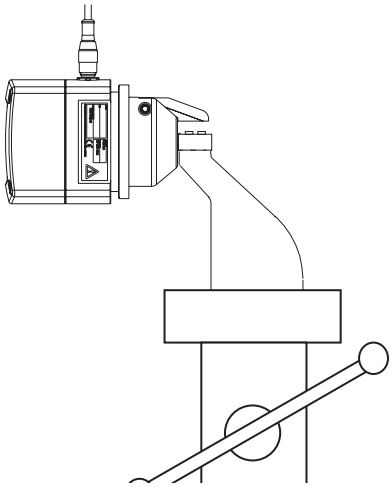

3. Undo the two screws (3) that hold the blade and remove it.
   If the O-ring seal on the measuring module is to be replaced, see section 5.3.5.2: *Mount the New O-Ring Seal*.
   Otherwise mount the new (or adjusted) blade. See section 5.3.2.2: *Mount the Blade and Deflector*.

5.3.2.2 Mount the Blade and Deflector

Spare parts required:
Blade

Tools required:
2.5mm Allen key/hexagon spanner

Consumable required:
(Heli-Coil thread inserts)

1. Verify that the Heli-Coil thread inserts in the screw holes of the blade are in place.
   If not, mount new ones.
2. Mount the blade onto the spindle.
   Make sure the transmitter is fixed in the jaw wise during this procedure!
   Tighten the screws firmly!
3. Fit the deflector and tighten it in place with the screws.

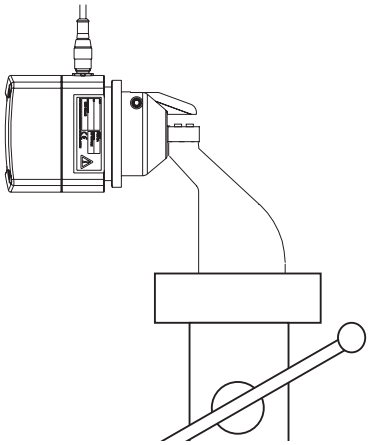

NOTE!
If the blade type is changed, or the transmitter's basic adjustment has been changed, a new basic calibration must be made. See section 5.2.3.1: *Basic Force Calibration with JCT-1200*.

4. If the blade type is changed, an update of the transmitter specifications must be performed. See section 5.3.6: *Change Transmitter Specifications*.

5.3.2.3 Mount Transmitter

See Installation Instructions.

5.3.3 Circuit Board Replacement

The circuit board is replaced when:

- The transmitter is not operating properly and the electronics troubleshooting has indicated an error in the circuit board.
- A leakage into the transmitter has occurred that is causing damage to the circuit board. (In this case the measuring unit is probably damaged).
- Over-voltage has caused damage to the circuit board.

NOTE!
If a back-up of all values exist, a change of circuit board can be performed at site.

5.3.3.1 Remove the Circuit Board

Tools required:
Snap ring pliers Small screwdriver 2.5mm Allen key/hexagon spanner ESD protection (Small pliers) (Wise)

1. Loosen the four bolts holding the cover and remove the cover.
2. Disconnect the cables from their connectors (1) using a small screwdriver.

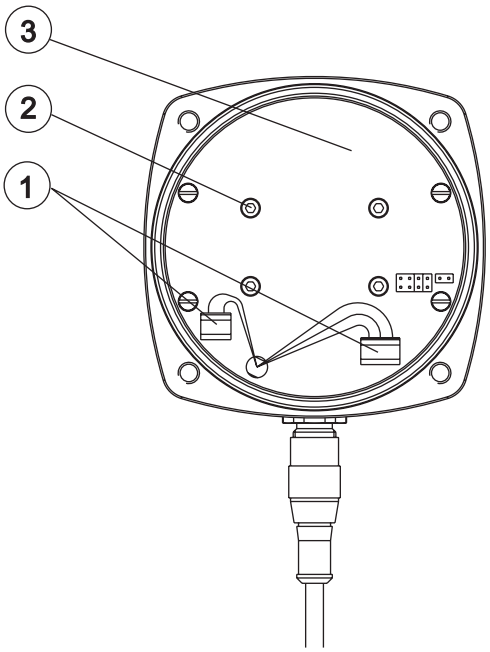

3. Remove the four screws (2) and remove the circuit board (3).
   Use ESD protection to avoid damaging the circuit board.
4. Disconnect the connector from the measuring module on the circuit board.
5. Verify that no leakage has occurred.
   If a leakage is found, locate and eliminate the leakage.

5.3.3.2 Mount the Circuit Board

Spare parts required:
Circuit board

Tools required:
Snap ring pliers 2.5mm Allen key/hexagon spanner (Small pliers) (Wise)

Consumable required:
Locking paint Silicone grease

1. Insert the five cables through the hole in the circuit board.
2. Mount the circuit board using the four screws.
   Lock the screws holding the card with locking paint.
3. Connect the cables according to the following connection table:

Chassis Connector	Color	Terminal block	Position on terminal blocks
1	Brown	SK1	1
2	White	SK1	2
3	Blue	SK1	3
4	Black	SK2	1
5	Grey (green/ yellow)[(a)]	SK2	2

(a) Depending on manufacturer there can be different color coding.

4. Mount the cover using the four bolts.
5. Enter all values from the noted back-up or make a basic adjustment of the transmitter. See section 5.2.3.1: *Basic Force Calibration with JCT-1200*.

5.3.4 Measuring Module Replacement

The measuring module is replaced when:

- The blade has been exposed to severe external forces and the measuring module settings are distorted and can not be adjusted correctly.
- The differential transformer is damaged.
- The troubleshooting of the electronic indicates an error in the measuring module.

NOTE!
The measuring module must not be repaired or adjusted! The module is delivered as a complete spare part. A faulty measuring module MUST be sent to BTG for factory repair.

It is worth sending a faulty measuring module to BTG for repair rather than discarding the unit, as the measuring module is the most expensive part of the transmitter. Contact your local BTG dealer.

5.3.4.1 Remove the Measuring Module

Tools required:
Snap ring pliers 2.5 mm Allen key/hexagon spanner 4 mm Allen key/hexagon spanner (Small pliers) (Wise)

1. Remove the blade. See section 5.3.2.1: *Remove the Blade and Deflector*.
2. Remove the housing cover.
3. Remove the circuit board. See section 5.3.3.1: *Remove the Circuit Board*.
4. Remove the 3 bolts (1) at the bottom of the transmitter housing.

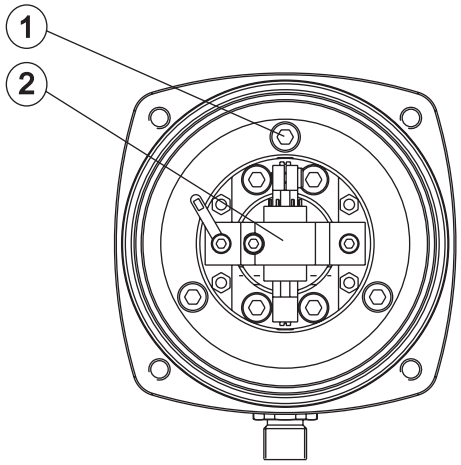

5. Carefully extract the measuring module (2).
6. Send the measuring module to BTG for factory repair.
   Contact your local BTG dealer.

5.3.4.2 Change the O-ring Seal

See section 5.2.1.2: *Housing*.

5.3.4.3 Mount the Measuring Module

Spare parts required:
Measuring module complete

Tools required:
Snap ring pliers 2.5mm Allen key 4 mm Allen key (supplied in transmitter delivery) (Small pliers)

Consumable required:
Locking paint Silicon grease Loctite 222

1. Insert the measuring module into the housing.

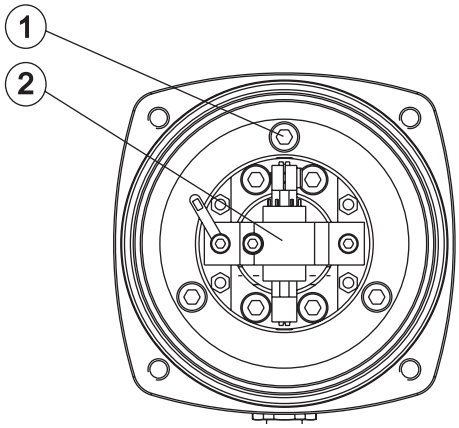

NOTE!
Position the measuring module so that the deflector ridge is on the same side of the housing as the cable connection.

2. Tighten the three bolts slightly.
3. Mount the blade temporarily.
4. Align the blade with the housing.
   Use a ruler on the flat area on the housing.
5. Tighten the three bolts hard.
   Secure the three bolts using a weak type of locking fluid (Loctite 222).
6. Mount the circuit board. See section 5.3.3.2: *Mount the Circuit Board*.
7. Mount the housing cover.
8. Mount the blade. See section 5.3.2.2: *Mount the Blade and Deflector*.
9. Make a basic adjustment. See section 5.2.3: *Calibration of Transmitter* or section 5.2.3.2: *Basic Force Calibration with SPC-1000*.

5.3.5 Measuring Module O-Ring Seal Replacement

NOTE!
Replacing this O-ring seal is complicated, because it have impact on the transmitters calibration. This should be done by BTG qualified personnel.

The O-ring seal in the measuring module is used to prevent fibers and other impurities penetrating and blocking the spindle movement. Note that fluid is allowed enter the cavity behind the O-ring, but not any further. This does not affect the transmitter performance.
The standard O-ring seal is made of a fluorine-type rubber material developed for the pulp and paper industry and have an extremely high resistance to all chemicals.

As an option the O-ring seal is available in EPDM quality. EPDM is recommended in applications where the pH level is high (more than 12), for example unwashed sulfate pulp, or hydro peroxide (H_2O_2) bleach plant applications with high pH.

The O-ring seal is a low cost spare part and it is easy to replace. It should be replaced as a preventive action when aggressive chemicals are present and also when very reliable measurements are required.

The O-ring seal is replaced when:

- The transmitter is gradually drifting and has lost sensitivity.
  The rubber in the O-ring seal has been chemically attacked and lost its original properties.
  Verify that correct quality is used.

NOTE!
Drift can occur for numerous reasons; change of fiber type, freeness level, temperature, flow velocity, or other process related parameters.

5.3.5.1 Remove the O-Ring Seal

Tools required:
Snap ring pliers 2.5mm Allen key 4 mm Allen key (supplied in transmitter delivery) (Small pliers)

1. Remove the blade. See section 5.3.2.1: *Remove the Blade and Deflector*.
2. Remove the three screws (1) holding the washer (2) in front of the O-ring seal. Use a screwdriver to carefully bend out the washer.

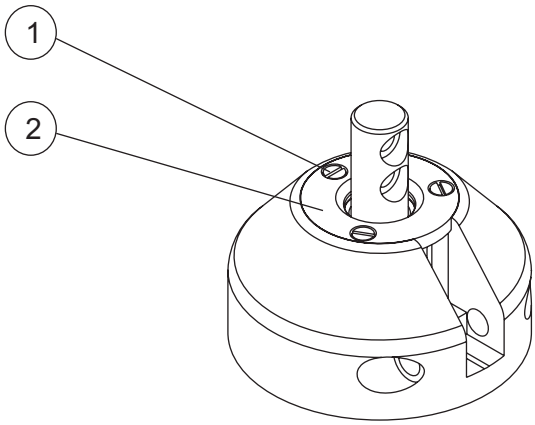

3. Remove the O-ring seal with a small screwdriver.
   Discard the old O-ring.
4. Clean the O-ring cavity using a solvent and pressurized air.
5. Verify that the spindle is centred in the surrounding hole.
   The clearance between the spindle and the surrounding hole in the measuring module should be between 0.07 and 0.1 mm.

NOTE!
If there is no clearance between the spindle and the surrounding hole in the measuring module, the complete measuring module must be replaced. See section 5.3.4.1: *Remove the Measuring Module*.

5.3.5.2 Mount the New O-Ring Seal

Spare parts required:
O-ring seal

Tools required:
Pipe, plastic

Consumable required:
Locking paint Silicon grease Loctite 222

1. Inspect the new O-ring seal to ensure the quality is acceptable (no burrs or other deformations).
2. Lubricate the O-ring seal lightly using silicon grease or vaseline on the inside and outside.
3. Note the **Raw** signal in the **Shear force trim** window in the JCT-1200.
4. Fit and the O-ring seal onto the spindle and push it down.
   Use a plastic pipe with an inner diameter of 14 mm and outer diameter of 20 mm (approximately 60 mm long) to push the O-ring seal into its cavity.

   NOTE!
   There should be no sharp edges on the end of the pipe. This could ruin the O-ring seal.

5. Move the spindle in the measuring direction.
   If the value has changed more than approximately 4.0 units, use a screwdriver to lift the O-ring, turn it slightly in a single direction, and use the pipe to press down the O-ring seal again.
   Remove the pipe and verify the reading again. It is possible to adjust it by “turning” the O-ring. Repeat this action by turning the O-ring in the one single direction until the reading is within the tolerance.
6. Fit the washer in front of the O-ring seal and tighten it with the three screws.

   NOTE!
   Make sure the screws are equally tightened so that the force on the O-ring seal is even as the washer pushes it down.

7. Verify the reading to make sure it is within ±8.0 units.
   If it more than ±8.0 units, loosen the screws slightly, turn the washer, and re-tighten the screws.
8. Mount the blade on the transmitter. See section 5.3.2.2: *Mount the Blade and Deflector*.
9. Make a basic calibration of the transmitter. See section 5.2.3.1: *Basic Force Calibration with JCT-1200*.

5.3.6 Change Transmitter Specifications

1. Press the **Menu (F1)**, step down through the menu tree to **General Settings**.
2. Select a parameter to edit. Press the **Edit (F3)** key.
   The menu bar changes.
3. Select the **Tag** or **Serial No.** Press **Edit (F3)**.
4. Enter appropriate value. Press **OK (F1)**.

5.3.7 Change Connector

Spare parts required:
Chassis connector

Tools required:
Snap ring pliers 2.5mm Allen key 4 mm Allen key (Small pliers)

Consumable required:
Locking paint Silicon grease Loctite 222

1. Loosen the four screws and remove the cover.
2. Disconnect the connector cables from the circuit board.
3. Remove the connector from the housing.
4. Mount the new connector.
5. Pull the cables up through the hole in the circuit board.
6. Connect the connector cables according to the table below

Chassis Connector	Color	Terminal block	Position on terminal block
1	Brown	SK1	1
2	White	SK1	2
3	Blue	SK1	3
4	Black	SK2	1
5	Grey (green/ yellow)[(a)]	SK2	2

(a) Depending on manufacturer there can be different color coding.

7. Mount the cover.

5.4 Troubleshooting

Symptom	Probable Cause	Action
1. SBT-2400 output does not correspond to actual consistency	1.1. Cabling problems	Verify that all cables are connected correctly and that the cables are OK.
	1.2. Damaged blade	Check if the blade is damaged. Remove the transmitter from the stud and mount it in its calibration stand. Remove the blade and mount a new, or corrected, blade on the transmitter. Make a basic force calibration. If there are no changes in the output, change the measuring unit.
	1.3. Damaged measuring unit	Check if the transmitter responds to calibration. Remove the transmitter from the stud and mount it in its calibration stand. Use different weights to determine if there are changes in the output. If there are no changes in the output, change the measuring unit.
2. SBT-2400 output does not correspond to lab consistency values	2.1. Calibration needed	Remove the transmitter from the stud and mount it in its calibration stand. Make a basic force calibration.
	2.2. Damaged blade	Check if the blade is damaged. Remove the transmitter from the stud and mount it in its calibration stand. Remove the blade and mount a new, or corrected, blade on the transmitter. Make a basic force calibration. If there are no changes in the output, change the measuring unit.
	2.3. Damaged measuring unit	Check if the transmitter responds to calibration. Remove the transmitter from the stud and mount it in its calibration stand. Use different weights to determine if there are changes in the output. If there are no changes in the output, change the measuring unit.
3. SBT-2400 is measuring correctly but the display does not respond to the transmitter or any operator input	3.1. Junction box, circuit board, or wiring is faulty	Verify that all wires are connected properly. Open the housing and check all wire connections. If all wires are connected correctly, check junction box. If fault not found in junction box, change the electronics unit.

Symptom	Probable Cause	Action
4. SBT-2400 operates in a normal manner, except the HART interface.	4.1. Transmitter software is not responding	Reboot the transmitter. Disconnect the cable to the transmitter. Wait 10 seconds. Reconnect the cable. Is HART working now? If not, go to next problem cause.
	4.2. Faulty electronics unit	Verify the following: - The measuring resistor must be 250 ohm minimum. - The supply voltage is high enough. - The terminal voltage is 11V minimum Does HART operate at any signal current? If it does, try changing the cable. If that does not work, or HART does not operate at all, change the electronics unit.

6 Parts List

6.1 Spare Parts

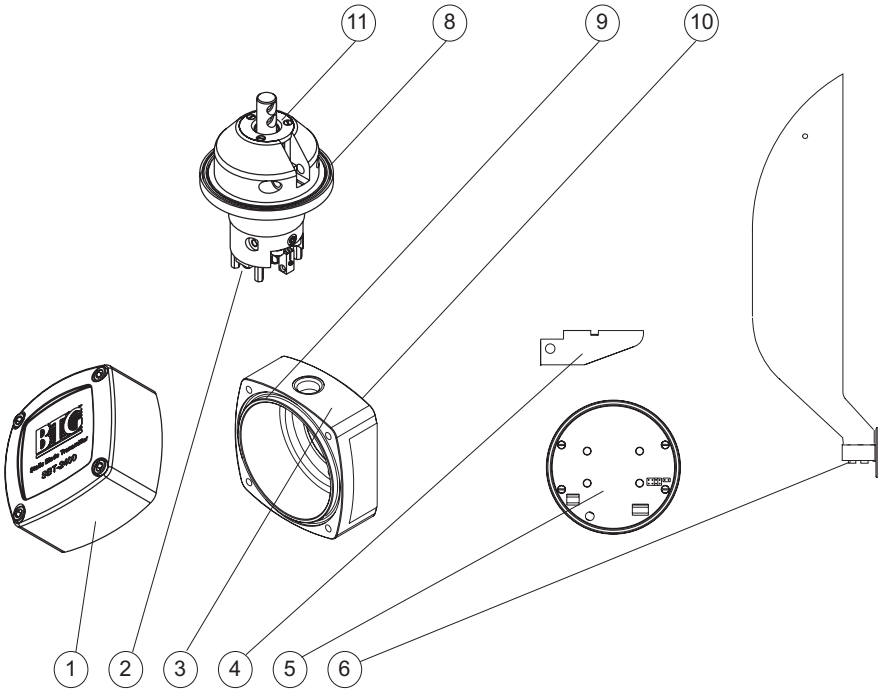

Item No.	Rec. spare parts	Qty	Part No.	Spare Part	Description
1		1	A0065284	Housing cover	
2		1 Alt.	82142639 B0020552	Measuring module	SS steel 254 SMO
3		1	A0065250	Housing	
4		1	14428775	Deflector, blade A, B, and D	SS steel
		1 Alt.	A0068866 B0020511	Deflector, blade C	SS steel 254 SMO
5	*	1	A0065508	Circuit board	
6		1	A0003905	Blade A	SS steel
		1	A0004457	Blade B	SS steel
		1 Alt.	A0083998 B0020503	Blade C	SS steel 254 SMO
		1	A0087981	Blade D	SS steel
7		1	46031001	Chassis connector	Complete with O-ring, not shown in figure
8		1	27008937	O-ring seal, wetted part	EPDM
9			27003151	O-ring seal, housing cover	EPDM
10		1	27000876	O-ring seal, housing	Viton
11		1 Alt.	27012640 27007533	O-ring seal, measuring module	Viton (standard) EPDM (option)
12			46031019	Cable, SBT to JCT-1200	Not shown in figure
13			A0080960	Quick Reference Guide	Not shown in figure

6.2 Optional Accessories

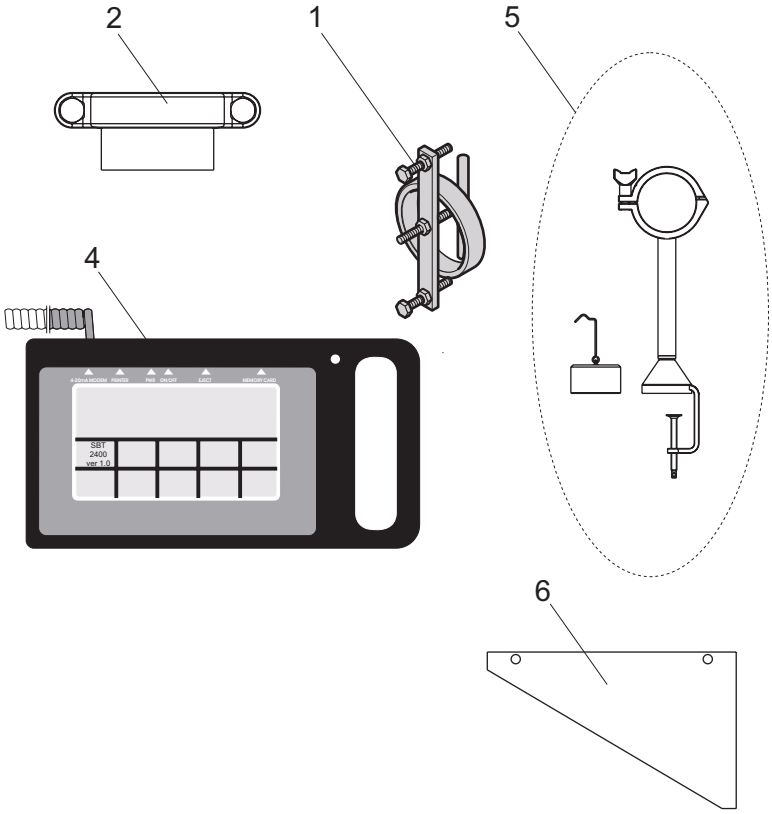

Item No.	Rec. spare parts	Qty	Part No.	Part Name	Description
1		1	83320358	Welding jig	Not shown in figure
2		1 Alt.	94411006 A0013631	Weld-in stud, complete	SS Steel 254 SMO
3		1	A0082651	FCI-1000	Fieldbus communication interface, not shown in figure
4		1	93253847	SPC-1000/A	
5		1	A0052266	Field Calibration Kit	
6		1 Alt.	A0003509 B0020495	Pipe deflector	SS steel 254 SMO

7 Appendix

7.1 Process Site Selection

When a process site is selected for installation there are several things to consider. This chapter gives guidelines on how to select the best process site to place the transmitter, and when flow guides and deflectors should be used.

There is a risk in certain installations that foreign objects such as large knots or incompletely dissolved pulp lumps, could damage the transmitter blade. To minimize possible damage, a deflector should be welded into the piping upstream of the transmitter.

The transmitter can be installed in a vertical, horizontal, or sloping process line. If the transmitter is installed in a horizontal or sloping process pipe, it must be mounted on the side of the pipe. Any other form of mounting must be avoided due to the risk of air bubbles that disturb measurement. See Fig 1.

Fig 1 Mounting alternatives for the SBT-2400

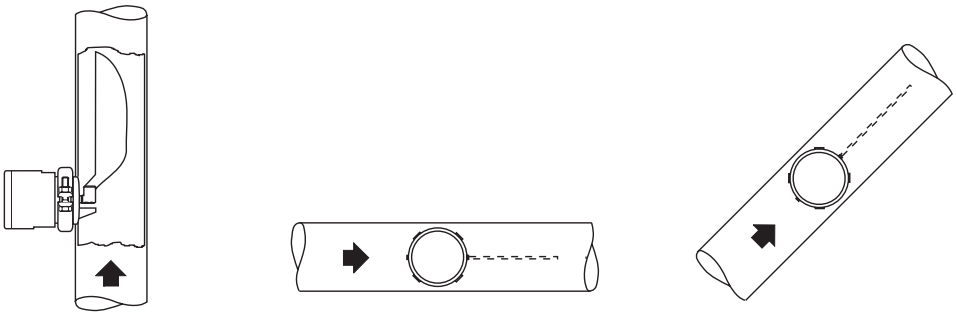

Never install the transmitter in a pipe section with turbulent flow. Verify that the straight pipe sections upstream and downstream of the transmitter are long enough.

In order to accurately calibrate the transmitter with high accuracy the sampling valve must be mounted as close to the transmitter as possible. The recommendations made regarding damping zones for transmitter mounting also apply to the sampling valve. This enables disturbances from pipe bends, pumps etc. to be avoided.

7.1.1 Straight Pipe Length Calculation

The nomogram in Fig 2 shows the recommended lengths of straight pipe at different operating flow velocities and consistency levels when a chemical pulp is in use. Multiply the relative length (L/D) with the tube diameter (D) to get the minimum length.

For mechanical pulp, the straight pipe length must be multiplied by 1.25.

Straight pipe length formula:

```
LB = L/D x D x Ic x Mp
LA = 0.5 x LB
LD = LB or more

Explanation of variables:
LB = Straight pipe length upstream of the transmitter
LA = Straight pipe length downstream of the transmitter
LD = Length before transmitter in double bend scenario
D = Pipe diameter
V = Pulp velocity
Cs = Pulp consistency in percent
L/D = Relative length (from the nomogram)
Ic = Installation constant (For horizontal installation Ic = 1.5, for
vertical installation Ic = 1)
Mp = Pulp type constant
(For chemical pulp Mp = 1, for mechanical pulp Mp = 1.25)
```

Fig 2 Nomogram

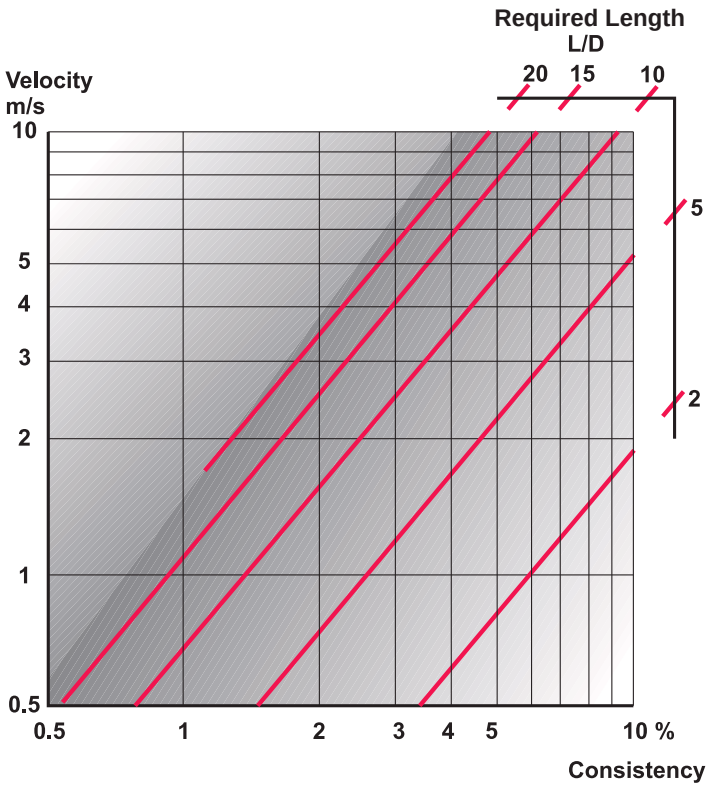

7.1.2 Vertical Pipe Installation

The following installation scenario is recommended.

Calculation example for a vertical pipe:

D = 200 mm

Cs = 3.5%, chemical pulp

V = 2.4 m/s

The nomogram shows a relative length (L/D) ≈ 7.5. The Mp constant is 1 and the Ic constant is also 1.

LB = L/D x D x Mp x Ic

LB = 7.5 x 200 x 1 x 1 = 1500 mm.

LA = 0,5 x LB

LA = 750 mm

The recommended length upstream the transmitter is 1500 mm and the recommended length downstream the transmitter is 750 mm.

Fig 3 Transmitter installation examples

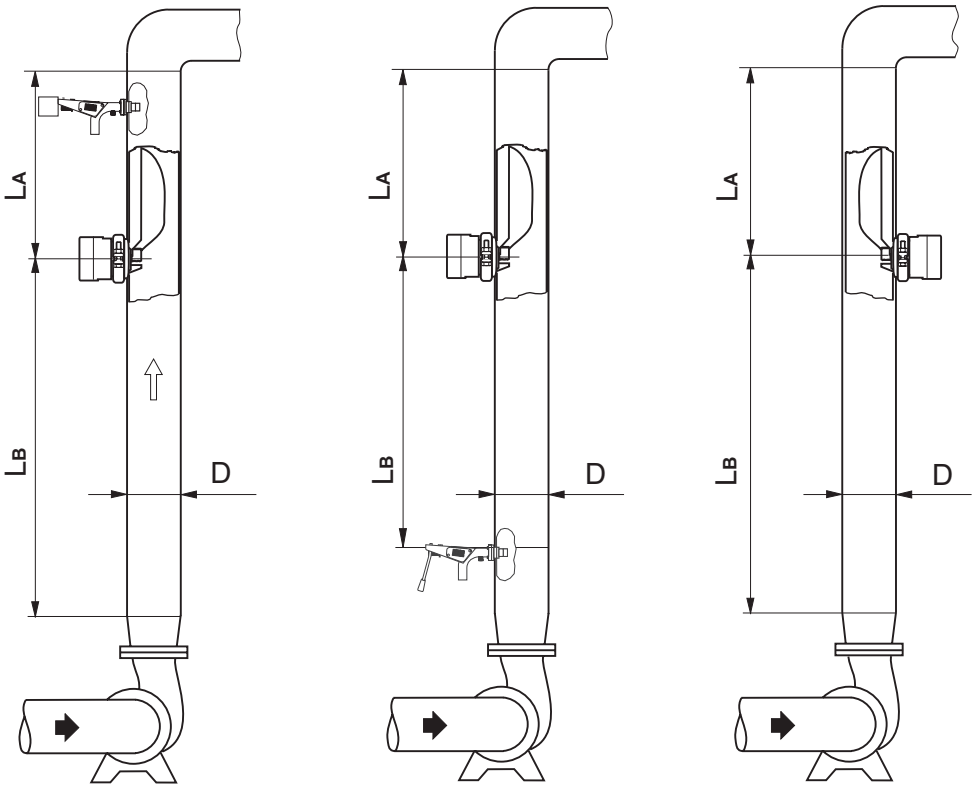

7.1.3 Horizontal Pipe Installation

If there is no vertical pipe section with the correct length, a horizontal installation on the side is recommended.

Note that the straight section must be 50% longer than the vertical example (Ic constant).

Calculation example of a horizontal pipe:

D = 200 mm

Cs = 3.5%, chemical pulp

V = 2.4 m/s

The nomogram shows a relative length (L/D) ≈ 7.5. The Mp constant is 1 and the Ic constant is 1,5.

LB = L/D x D x Mp x Ic

LB = 7.5 x 200 x 1 x 1.5 = 2250 mm.

LA = 0.5 x LB

LA = 1125 mm

The recommended length upstream of the transmitter is 2250 mm and the recommended length downstream of the transmitter is 1125 mm.

Fig 4 Horizontal pipe installation

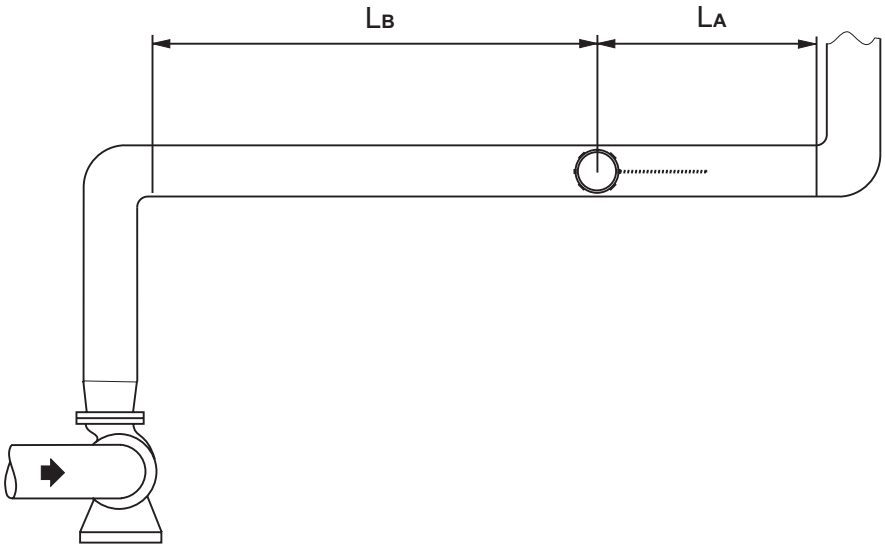

7.1.4 Multiple Bend Piping Installation

If there are multiple bends upstream of the transmitter, then the LD must be equal to L or longer. If not, flow guides must be installed.

Two successive pipe bends can also create as twisting flow that cannot be straightened, even if the recommended straight sections are used.

Calculation example for pipe with multiple bends

D = 200 mm

Cs = 3.5%, chemical pulp

V = 2.4 m/s

The nomogram shows a relative length (L/D) ≈ 7.5. The Mp constant is 1 and the Ic constant is 1.

LB = L/D x D x Mp x Ic

LB = 7.5 x 200 x 1 x 1 = 1500 mm.

LA = 0.5 x LB

LA = 750 mm

LD = LB or more

LD = 1500 mm or more

The recommended length upstream of the transmitter is 2250 mm and the recommended length downstream of the transmitter is 1125 mm. The recommended L_D value must be 1500 mm or more.

Fig 5 Multiple bends scenario

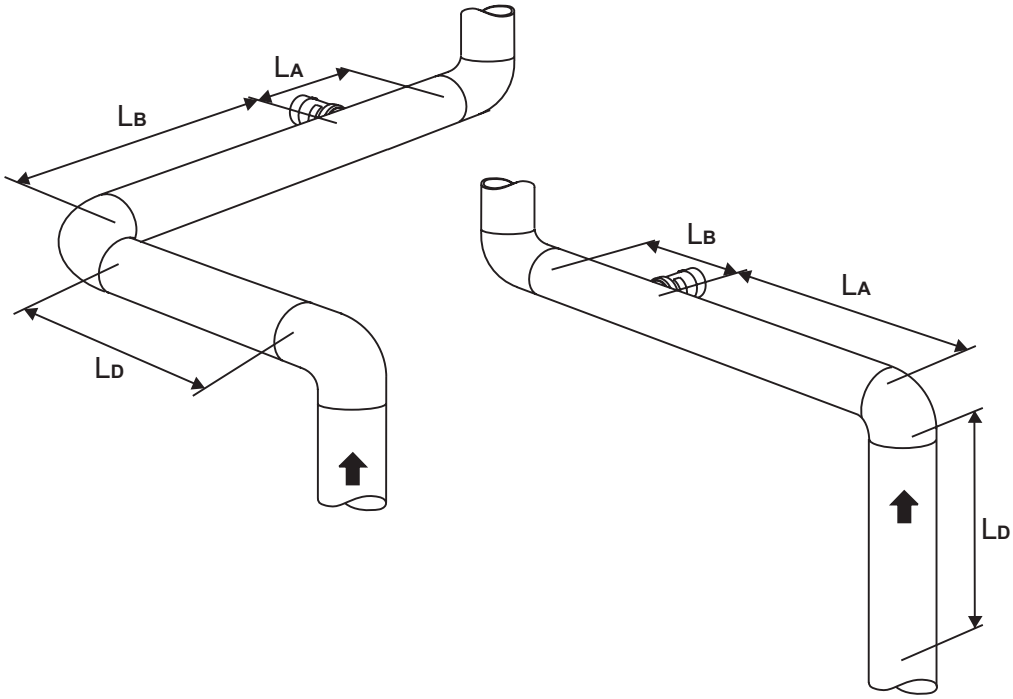

7.1.5 Valve and Pump Influences

If a valve is mounted directly after a pump, the flow characteristics from the pump are influenced. The axis of the butterfly valve should be parallel to the axis of the pump for best flow results.

A control valve can cause the pulp to thicken. The thickening effect is dependent on the type of pulp and its consistency, and varies with flow rate. If the transmitter is installed too close to a pump or a valve, the output signal from the transmitter will be flow dependant.

Fig 6 Valve influence

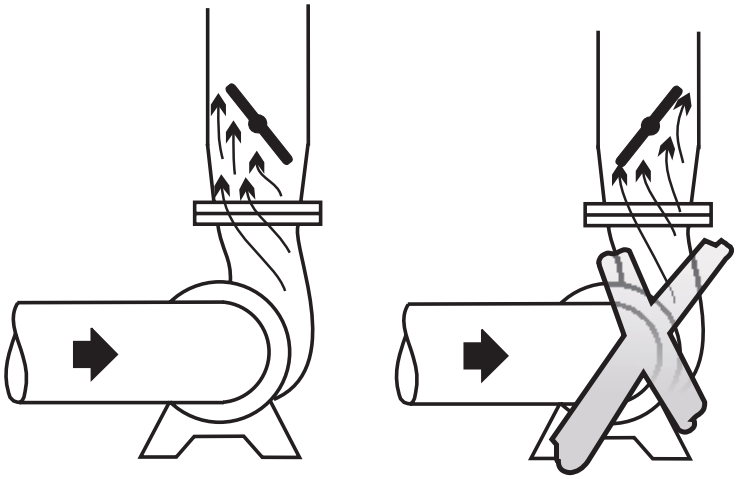

7.2 Flow Guide and Pipe Deflector Installation

In some installations there is not possible to have a straight length of pipe upstream of the transmitter that is long enough, or there can be a spiral flow. A flow guide must then be installed upstream of the transmitter.

In other applications there is an unavoidable risk that foreign objects, such as fragments of knots, incompletely dissolved pulp lumps etc., could damage the transmitter. To minimize the risk, a deflector should be installed upstream of the transmitter.

A reversal of flow can also damage the transmitter. If a reverse flow is possible, the installation must be completed with a reverse flow deflector located downstream of the transmitter.

NOTE!
Flow guides will act as deflectors and therefore it is not necessary to install both. If flow guides are needed, it is only necessary to install the flow guides, not any deflectors.

7.2.1 Pipe Deflector Installation

See Fig 7 where to place the deflector. The alternative A is included in a standard delivery but making a deflector like alternative B will work fine. For welding instructions, see section 3.3.2: *Pipe Deflector*.

Fig 7 Pipe deflectors

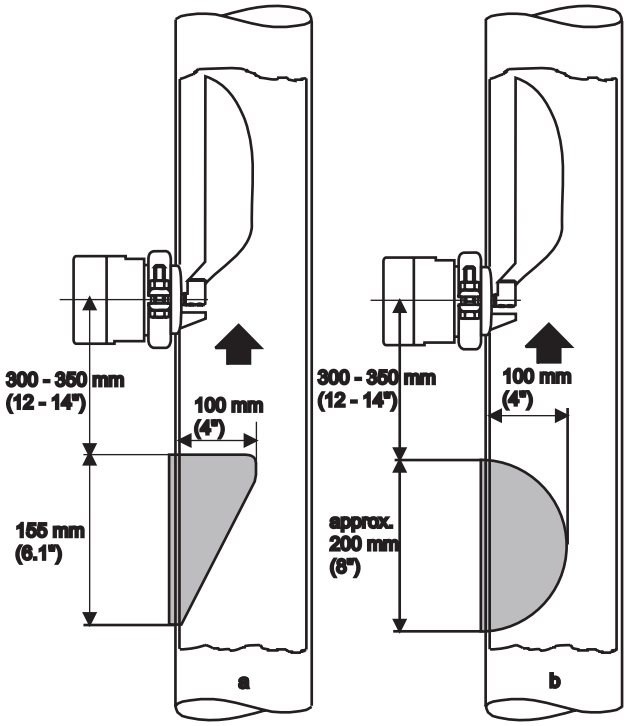

7.2.2 Flow Guide Installation

See Fig 8 for the arrangement and size of the flow guides. For pipes smaller than 250mm, the size of the flow guides must not be less than 100mm. For welding instructions, see section 3.3.2: *Pipe Deflector*.

Fig 8 Arrangement of flow guides.

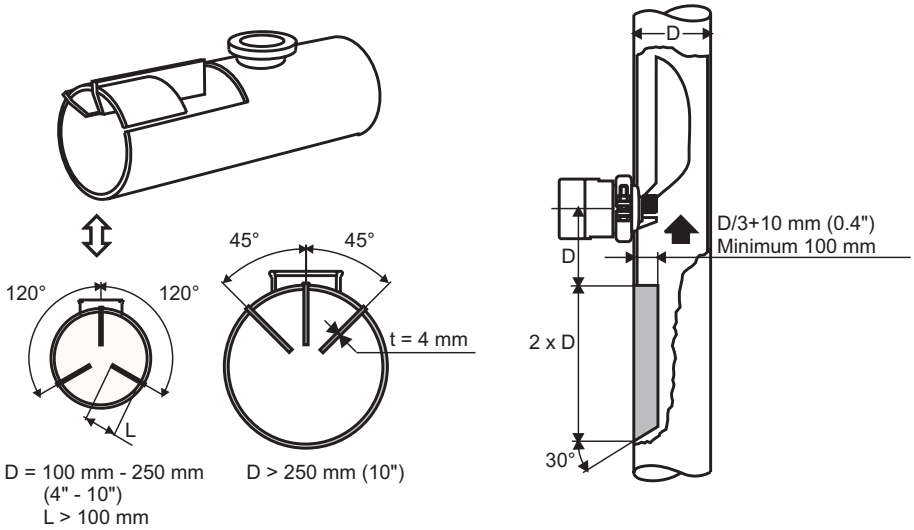

7.2.3 Reverse Flow Installation

When there are risk for reverse flow, it is important to protect the transmitter with reverse flow deflectors. The deflectors can be of the same type as used upstream of the transmitter. If a flow guide is mounted, it will also act as a deflector and the same type can be used downstream. For welding instructions, see section 3.3.2: *Pipe Deflector*.

Fig 9 Reverse flow deflectors

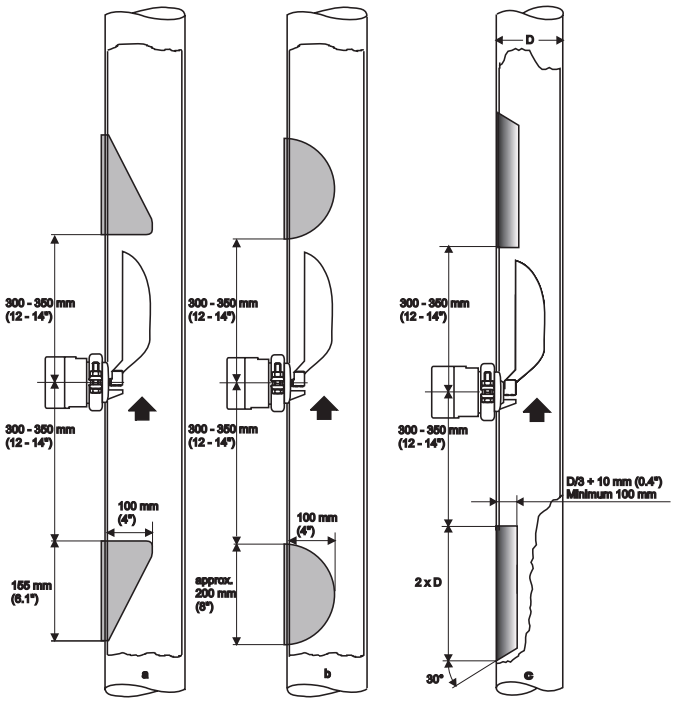

7.3 Dilution

NOTE!
Calculate the dilution water control valve correctly and use a high quality precision actuator. Make sure that the dilution water pressure is stable and that the water is injected at high velocity into the pump suction.
Correct dilution is essential to ensure reliable transmitter operation!

Dilution water should be pressure-controlled or otherwise protected from major pressure variations.

To ensure good control, dilute no more than 20% in each dilution stage, though a higher percentage may be acceptable early in the process.

If considerable dilution is required it should be carried out in two stages, 70% to 80% of the water being added in the bottom part of the pulp chest and the remainder in the form of a fine dilution upstream of the pump.

To avoid consistency variations, thoroughly mix the bottom of the pulp chest upstream of the transmitter.

The dilution water pipe should be inserted in such a way that it extends 15–50 mm (0.6–2 in), depending upon pipe size, into the main pipe on the suction side of the pump, see Fig 10. The pipe must be inserted perpendicular to the suction stud. The pipe should be located at 1/3 of the distance between the pump and the chest, measured from the pump, to avoid back flow into the chest.

At the point of injection, the dilution water pipe should be dimensioned to produce a rate of flow 3–4 times faster than the flow in the main pipe. Typically this means a dilution water flow 3–5 m/s (10–16.5 fps) at max flow in the suction pipe. The dilution water pipe should have the same or larger dimension as the valve bore to prevent the valve being plugged by pulp at water pressure loss.

Choose a dilution water valve with linear characteristics. The pressure drop over the valve should be at least 0.5 bar (7 psi) and should exceed 25% of the total pressure drop in the dilution water line. The valve and its actuator must operate with the least possible backlash and smallest possible dead zone. The valve must be tight when in its closed position, see Fig 10.

NOTE!
Additional information in *“Accurate Consistency — a hand-book in consistency measurement in pulp and paper processing”*— available from BTG.

Fig 10 Dilution water supply at consistency control

Δp = Dilution water pressure difference, upstream / downstream of the dilution water valve
V1 =Velocity: 3–5 m/s, (10–16.5 fps)
V2 =Typically 2–3 m/s (6.5–9.8 fps) for normal consistency installations
G =Min. 15–50 mm / 0.6–2 inches depending upon suction pipe size
Δp =min. 0.5 bar / 7 psi
L =See fig 7 on page 61

A =Recommended design
B/C=Not recommended

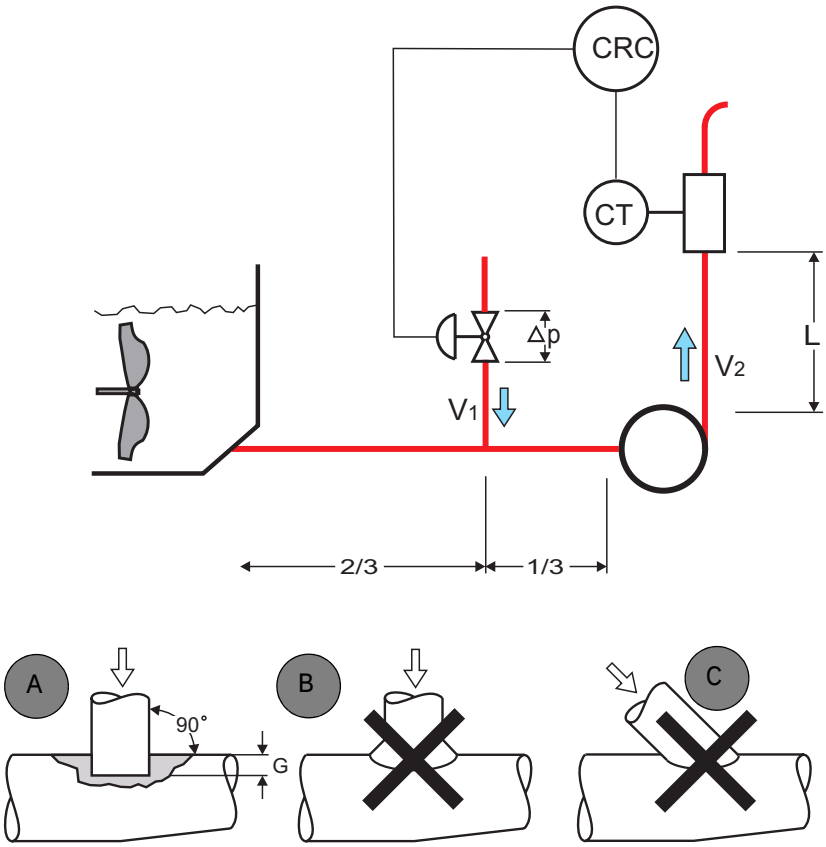

Location of the dilution water valve:

The conventional method is to install the valve above the highest pulp level in the chest, to prevent pulp from entering the valve during a shutdown. With modern large chests it is not always possible to meet this requirement.

NOTE!
Do not use saddles in dilution water piping, see Fig 10 (B).

NOTE!
We recommend locating the valve as close as possible to the suction pipe wall.

7.4 Dimensioning of the Dilution Water Valve

Calculation of dilution water quantity – Q

Required data:

Production [t/h] = P

Uncontrolled consistency [%] = C1

Desired controlled consistency [%] = C2

7.4.1 Calculation Formula for Dilution Water Flow:

$$\frac{P \times 100(C1 - C2)}{C1 \times C2} = Q \quad m^3/h$$

Example:

Production = 8 t/h

Uncontrolled consistency = 3%

Desired controlled consistency = 2.5%

$$Q = \frac{8 \times 100(3 - 2{,}5)}{3 \times 2{,}5} = \frac{800 \times 0{,}5}{7{,}5} = 53{,}3 \quad m^3/h$$

7.4.2 Dimensioning of the Dilution Water Valve

Calculation formula for the capacity factor K_v.

$$K_v = Q\sqrt{\frac{\rho}{1000 \times \Delta_p}}$$

NOTE!
$C_v = K_v \times 1.155$

K_v = Capacity factor (m³/h)

Q = Quantity of liquid (m³/h)

ρ = Density of liquid (kg/m³)

Δ_p = Pressure drop across the control valve (bar)

When the dilution water density normally is 1000 kg/m³ the formula can be simplified to:

$$K_v = \frac{Q}{\sqrt{\Delta p}}$$

The pressure of the dilution water should not vary more than 15%. In case of large pressure variations we recommend pressure control of the dilution water.

Fig 11 Example of traditional dilution before pulp pump

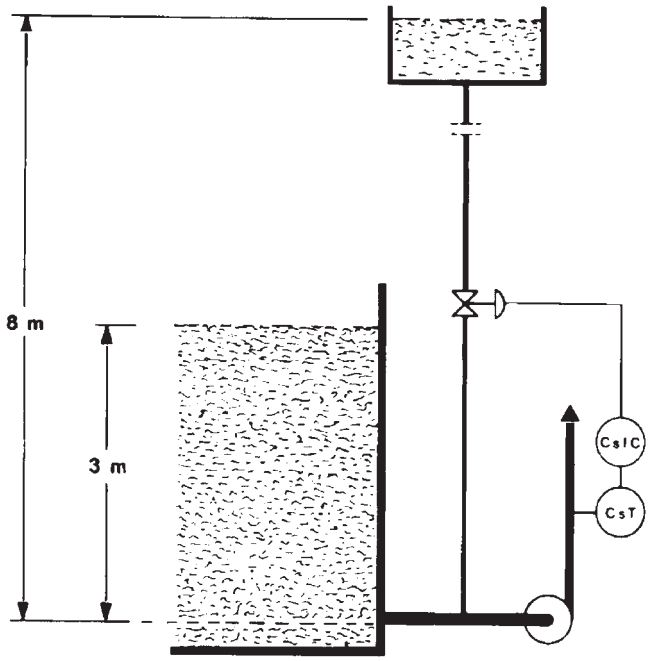

EXAMPLE:

In a traditional installation as shown in Fig 11, dilution water is injected before the pulp pump and the pressure drop across the control valve is equal to the difference between the dilution water pressure and the height of the pulp chest. The minimum pressure difference should be 0.4 - 0.5 bar / 6 - 7.5 psi.

In this case the pressure difference is 0.8 - 0.3 bar = 0.5 bar / 12 - 4.5 psi = 7.5 psi. Using the same data as in the examples above, the required Kv will be:

$$K_v = \frac{Q}{\sqrt{\Delta p}} = \frac{53,3}{\sqrt{0,5}} = 75,4$$

Choose a valve size 40 or 50 mm (1½ or 2 in) depending on the pipe dimension.

The velocity of the dilution water at the point of injection should be 3 - 5 m/s (10 - 16.5 fps). According to the nomogram in Fig 12 a pipe size of 60-80 mm (2.5 - 3.2 in) is a suitable dimension.

Fig 12 Nomogram for estimation of flow velocities of liquids

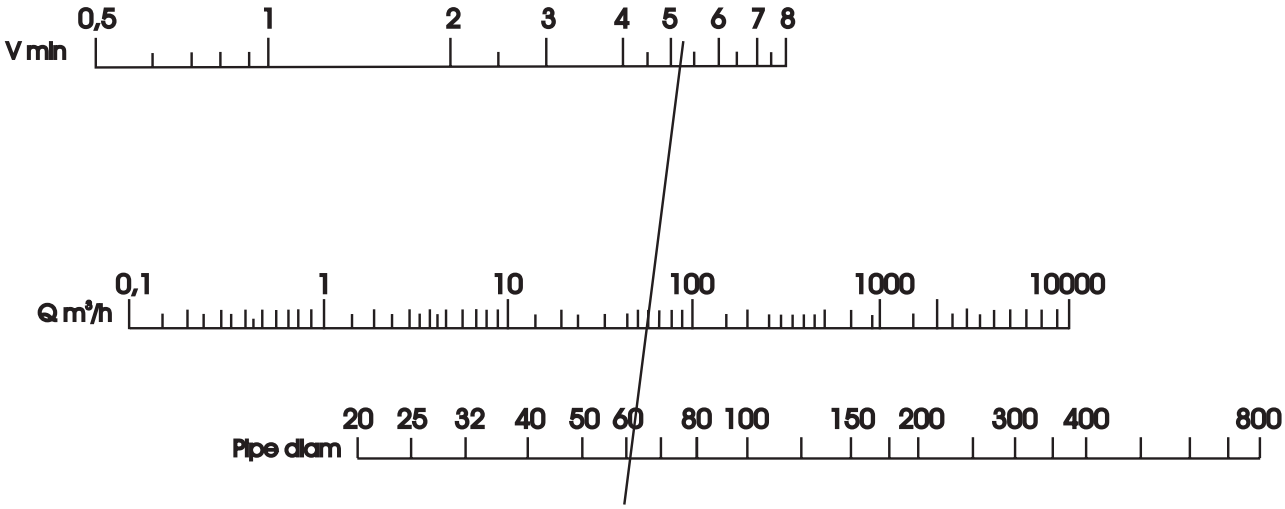

NOTE!
A correction factor must be applied when the valve is smaller than the supply pipe.

When dimensioning the valve a correction factor must be included for the reduction from a larger supply pipe to a smaller valve, see Fig 13. The calculated capacity factor K_V (C_V) is multiplied by the correction factor. The correction factor is determined by the degree of reduction.

Fig 13 Correction factor for reduced bores

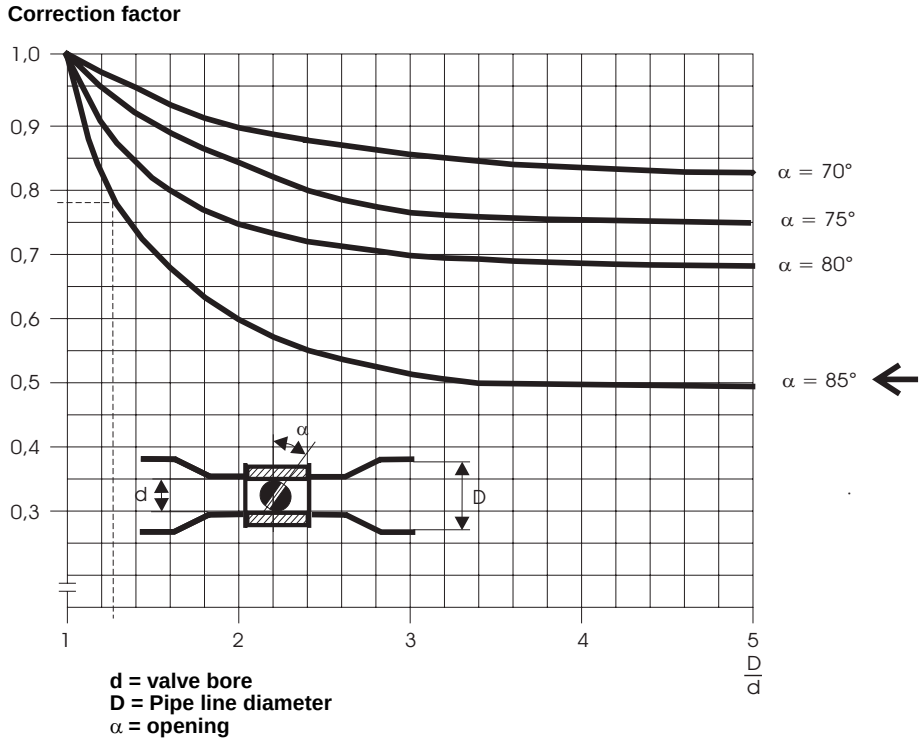

NOTE!
Use the curve for 85º valve opening when calculating the correction factor.

EXAMPLE:

Calculated K_v-value = 75.4

Pipe line dimension = 60 mm. (D)

Selected valve size 50 (d)

which has a K_v-value of 130 at 75º opening.

Check that selected valve K_v is sufficient, see Fig 15.

$\frac{D}{d}$ = 1.2 which gives a correction factor of 0.78

The valve K_v will be 0.80 x 130 = and the valve size 50 is sufficient.

Fig 14 Nomogram for flow velocities in pipes

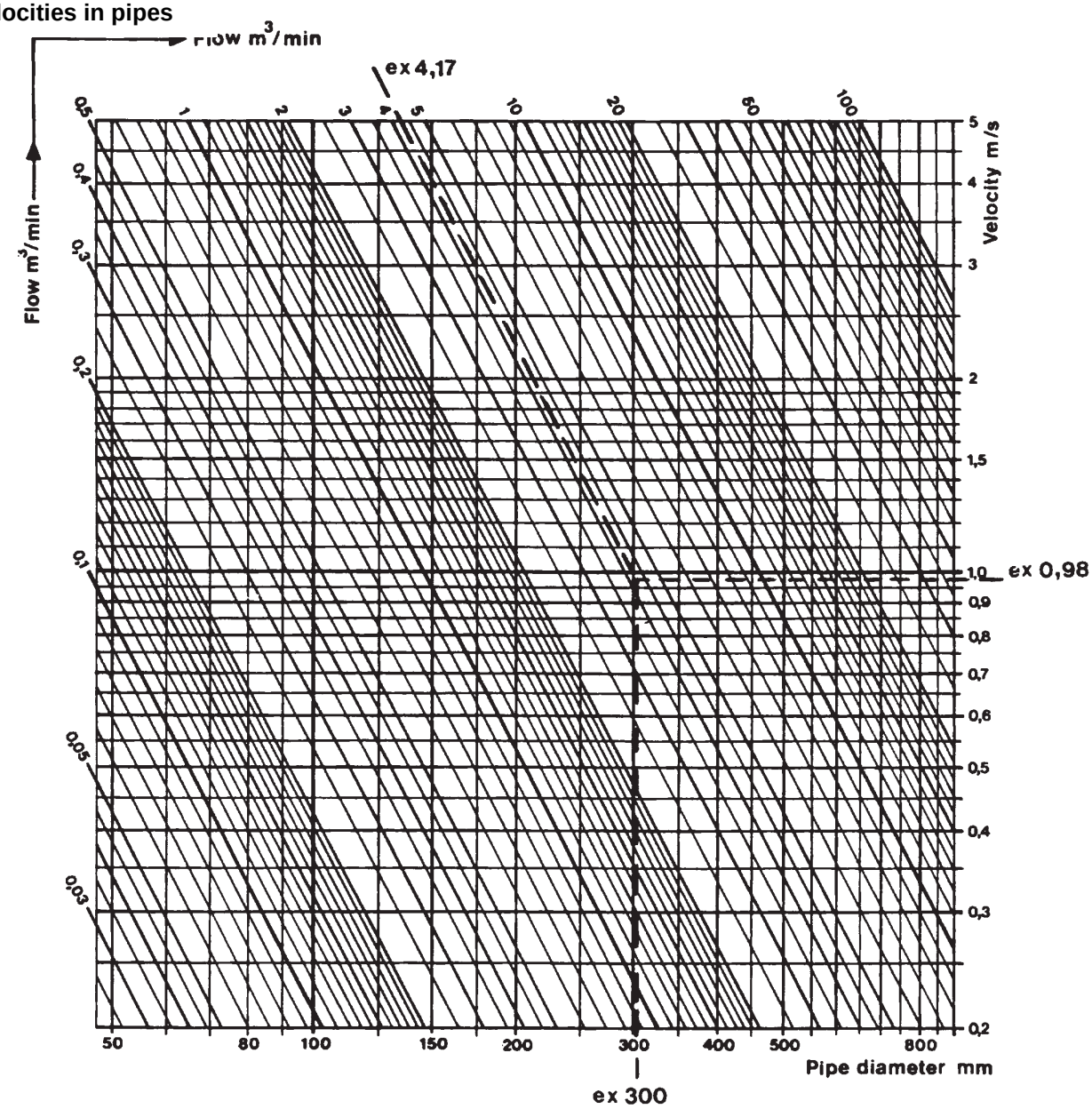

Example shown in Fig 14:

Q = 6000 m³ / 24 h

Pipe diam. = 300 mm

Thus velocity in the pipe line is:

$$\frac{Q}{t} = \frac{6000}{24 \times 60} = 4{,}17 \quad m^3/min.$$

In the nomogram (Fig 14) we can see that the flow velocity is ≈ 0.98 m/s (≈ 3.2 fps)

7.5 Pressure and Temperature Limits

Pressure and temperature limits for piping, pipe flanges and fittings of stainless steel — according to Swedish Standard SMS 1233:

For conversion to SI-units: 1 at ≈ 9.8 N/cm²

Maximum operating pressure:

Maximum operating pressures under normal conditions are given in the table below. The values stated must not be exceeded by more than 5%. However, the operating pressure must never exceed the nominal pressure (PN).

The diagram in Fig 15 shows maximum operating pressure for different pressure classes at different operating temperatures.

Stainless steel En 14404 according to SS 142343 (SS 316L).

EXAMPLE:

What is maximum operating pressure at 100°C operating temperature and pressure class PN 10?

Answer: 8 ato ≈ 8 bar.

Fig 15 Max. operating pressure at different operating temperatures

PN	Operating temperature ºC														
	0-20	30	40	50	60	70	80	90	100	120	140	160	180	200	250
6	6	5.5	5.5	5.5	5	5	5	5	4.5	4.5	4.5	4.5	4.5	4	4
10	10	9.5	9.5	9	9	8.5	8.5	8.5	8	8	7.5	7.5	7.5	7	7
16	16	15.5	15.0	14.5	14	14	13.5	13.5	13	12.5	12.5	12	12	11.5	11
25	25	24	23.5	23	22	22	21.5	21	20.5	19.5	19	18.5	18.5	18	17.5

(ato = atmosphere (atm) overpressure)

7.6 Menu Overview (only in English)

7.6.1 Measurement/Sampling

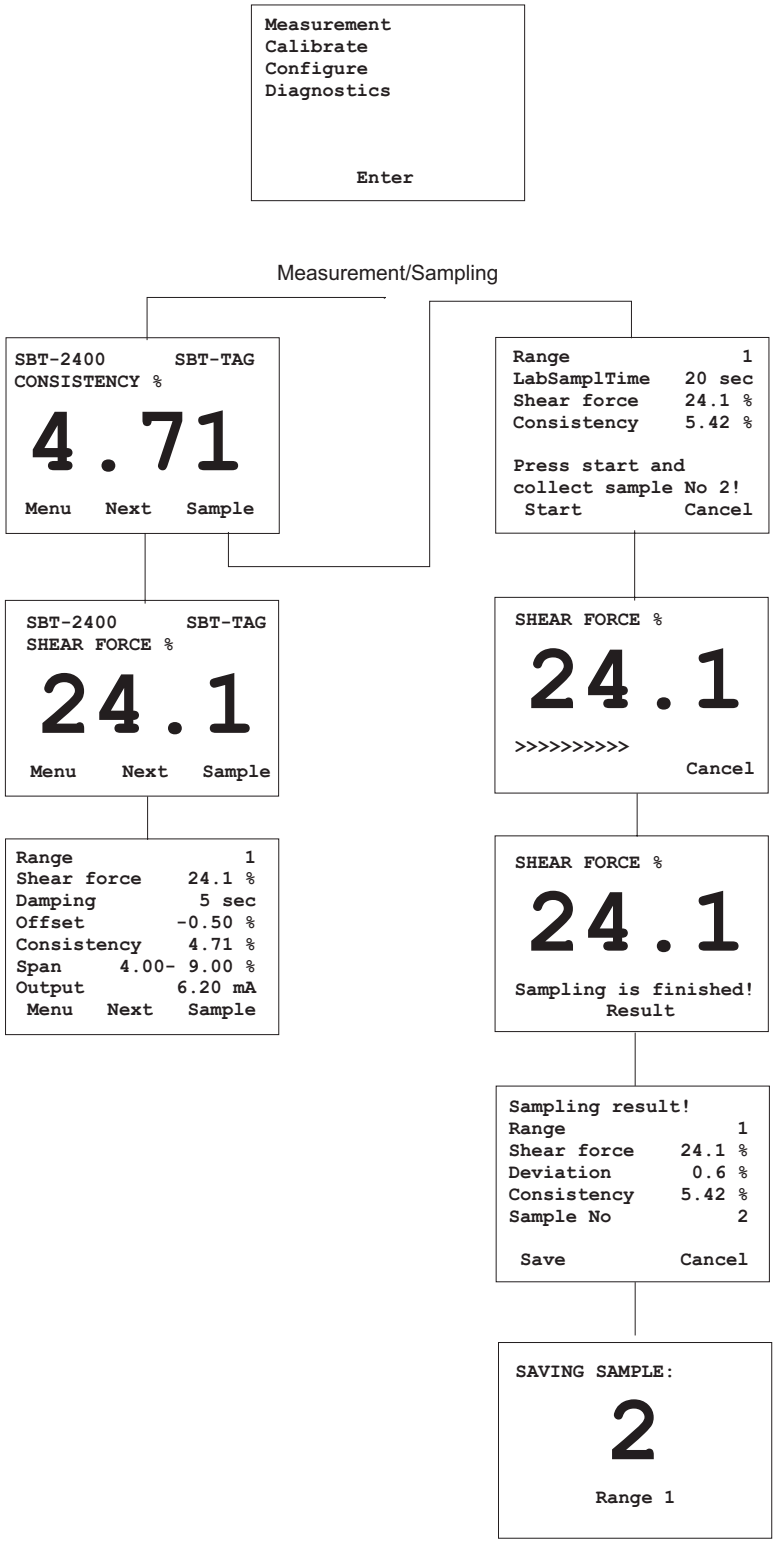

7.6.2 Calibrate

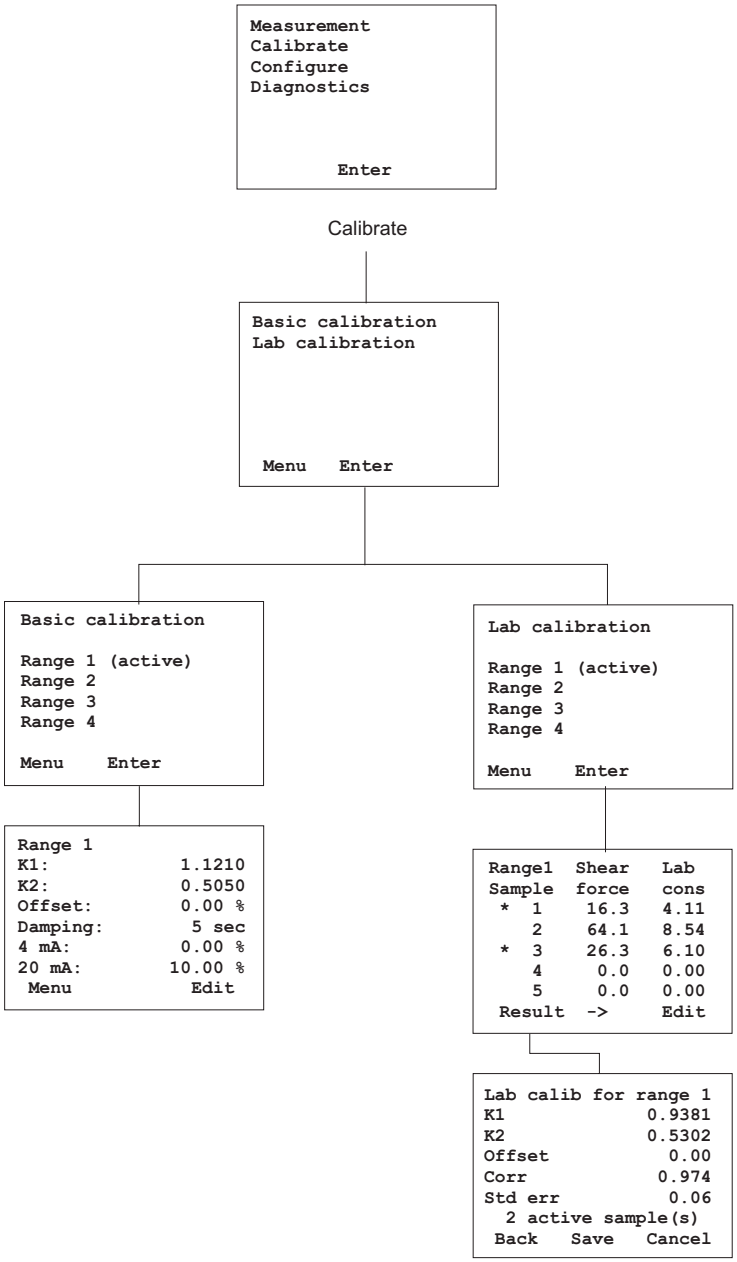

7.6.3 Configure

```
Measurement
Calibrate
Configure
Diagnostics

        Enter
```

Configure

```
General settings
Shear force trim
Analog output trim

 Menu   Enter
```

```
General settings
LabSamplTime:  20 sec
LcdBackLight:   0 sec
Blade type:         A
Tag:          SBT-TAG
Serial No: 1234567890

 Menu           Edit
```

```
Shear force trim
Mounted+air:      931
Blade:           1230
Blade+weight:    1672

Raw signal      935.4
Raw sig trim:      15
 Menu           Edit
```

```
Analog output trim

 4 mA trim:         0
20 mA trim:     16383
Test output: 12.00 mA

 Menu   Test    Edit
```

7.6.4 Diagnostics

```
Measurement
Calibrate
Configure
Diagnostics

        Enter
```

Diagnostics

```
Diagnostics
Temp       35°C  95°F
Peak temp  40°C 104°F

Software ver     1.00
Running hours      32
Program starts      5
 Menu
```

7.7 Blade Selection Guide

To be able to choose an appropriate blade, use the table below.

Pulp type		Blade A		Blade B		Blade C		Blade D	
		Flow limits: 0.5 - 5 m/s depending on pulp type		**Flow limits: 0.5 - 5 m/s depending on pulp type**		**Flow limits: 0.5 - 5 m/s depending on pulp type**		**Flow limits: 0.5 - 5 m/s depending on pulp type**	
		Cons: 1.5 - 7% depending on pulp type		**Cons: 2 - 8% depending on pulp type**		**Cons: 4 - 16% depending on pulp type**		**Cons: 1.5 - 8% depending on pulp type**	
		K1	K2	K1	K2	K1	K2	K1	K2
HWB	Hardwood, bleached Short-fiber chemical pulp bleached.	0.9959	0.4461	1.6912	0.3429	2.3736	0.4139	1.2925	0.3523
HWU	Hardwood, unbleached Short-fiber chemical pulp unbleached.	1.1407	0.3508			1.7086	0.4598	1.1831	0.3655
SWB	Softwood, bleached Long-fiber chemical pulp bleached.	0.8632	0.4318			2.0239	0.4418	0.8930	0.4210
SWU	Softwood, unbleached Long-fiber chemical pulp unbleached.	0.8539	0.4149			1.3745	0.4903	0.7282	0.4497
GW	Groundwood					1.8076	0.4534	1.1832	0.3258
TMP	Thermo mechanical pulp	0.6665	0.4356			1.7094	0.4581	1.1093	0.3394
CTMP	Chemical thermo mechanical pulp	0.5030	0.5378			1.7950	0.4552	0.9228	0.3788
ONP	Recycled old newspaper					2.2047	0.4521	1.2382	0.4069
OCC	Recycled old corrugated container					2.0064	0.4447	0.9234	0.4467